13th Int. Workshop on Generalized Nets
London, 29 October 2012, 56–61

Generalized net model of the process of evaluation of the environmental impact of refinery activity

Nikolai Novachev[1], Ivailo Marinov[1], Dicho Stratiev[1], Tania Pencheva[2] and Krassimir Atanassov[2]

[1] Lukoil Neftochim Burgas, Burgas-8104, Bulgaria
e-mails: Novachev.Nikolay@neftochim.bg, marinov.ivaylo.m@neftochim.bg, Stratiev.Dicho@neftochim.bg

[2] Institute of Biophysics and Biomedical Engineering, Bulgarian Academy of Sciences
105 Acad G. Bonchev Str., 1113 Sofia, Bulgaria
e-mails: tania.pencheva@biomed.bas.bg, krat@bas.bg

Abstract: A generalized net model of the process of evaluation of the environmental impact of refinery activity is described. The model uses intuitionistic fuzzy estimations, that give more detailed values than the crisp estimations. Presented model considers different aspects of environmental damages caused by refinery work, namely soil, water and air pollution. Developed model can be used to collect and interpret the data in different units and in a definite period of refinery activity.
Keywords: Ecology, Generalized net, Intuitionistic fuzzy estimation, Modelling.
AMS Classification: 68Q85, 03E72.

1 Introduction

In [5], the authors constructed a Generalized Net (GN; see [1, 3]) of the process of evaluation of the environmental impact of refinery activity. Here, we will extend this model, adding Intuitionistic Fuzzy Estimations (IFEs; for the concepts related with the intuitionistic fuzziness see [2, 4]) of the evaluations of the environmental impact of the separate refinery activities.

Oil is a key factor in the industries and the economic strategies of many countries all over the world. The costs of oil go beyond the financial to the political and environmental aspects that in

one or another way touch the lives of every human being. Although much of the world depends on the production or the trade of oil, these activities can cause severe damage to the environment, either knowingly or unintentionally [7, 8, 9, 10, 11]. Petroleum-derived contaminants constitute one of the most prevalent sources of environmental degradation in the industrialized world. In large concentrations, the hydrocarbon molecules that make up crude oil and petroleum products are highly toxic to many organisms, including humans. Petroleum also contains trace amounts of sulfur and nitrogen compounds, which are dangerous by themselves and can react with the environment to produce secondary poisonous chemicals [11]. Due to the very nature of oil resources, the environment is increasingly threatened and, in many cases, invariably affected.

The first way in which the environment is affected by the black gold is through both the drilling and the transportation processes. Oil waste dumping, production pollution, and spills wreak havoc on the surrounding habitat and wildlife. It threatens the extinction of many living beings, and has already harmed land, air, and sea flora and fauna. The effects of oil on marine life are cause by either the physical nature of the oil (physical contamination and smothering) or by its chemical components (toxic effects and accumulation leading to tainting). The most common problem comes in the drilling fluids used. In the past, oil drilling sites have used oil-based-muds to keep cuttings from the drill cleared away [8]. In the mud there is both diesel fluid and mineral oil, both harmful to the environment. While water-based-muds are available and provide a much more environmentally safe solution, they simply do not work as well for the drillers. Companies are working on creating more environmentally friendly drilling fluids, and as such some of them began making synthetic-based-muds - they have the desired affect of oil-based-muds with a much lower threat to the environment. Still, the perfect drilling solution beneficial to both human being and planet has yet to be found. Marine life may also be affected by clean-up operations or indirectly through physical damage to the habitats in which plants and animals live. The most at risk are those that could come into contact with a contaminated sea surface: marine animals and reptiles, birds that feed by diving or form flocks on the sea, marine life on shorelines, and animals and plants in mariculture facilities.

Meanwhile, transportation can be equally as devastating to the environment. Perhaps the most visible evidence of petroleum pollution are the catastrophic oil-tanker spills - ten largest by volume oil spills in history might be seen at [11]. They appear as news headlines and provide disheartening pictures of oilcoated shorelines and dead or oiled birds and sea animals. These spills occur during the transportation of crude oil from exporting to importing nations. Crude oil travels for long distances by either ocean tanker or land pipeline, and both methods are prone to accidents. Oil may also spill at the site where it is extracted and a blowout is one of the major risks of drilling for oil. It occurs when gas trapped inside the deposit is at such a high pressure that oil suddenly erupts out of the drill shaft in a geyser. Accidents with tankers, pipelines, and oil wells release massive quantities of petroleum into land and marine ecosystems in a concentrated form. The ecological impacts of large spills like these have only been studied for a very spill in the open ocean may do less harm to marine organisms than a small spill near the shore [11].

Not all oil released from land sources is quickly washed away to sea, however. Pipeline and oil-well accidents, unregulated industrial waste, and leaking underground storage tanks can all permanently contaminate large areas of soil, making them economically useless as well as dan-

gerous to the health of organisms living in and around them. Removing or treating soil contaminated by petroleum is especially urgent because the hydrocarbons can leach into the underlying groundwater and move into human residential areas. The engineering field of bioremediation has emerged in recent decades as a response to this threat. In bioremediation, bacteria that feed on hydrocarbons and transform them into carbon dioxide can be applied to an affected area. Bioremediation has in many cases made cleaning up petroleum-contaminated sites a profitable real-estate investment for land developers [11].

The U.S. Environmental Protection Agency (EPA) designates six criteria pollutants for determining air quality. These are, [10, 11]: carbon monoxide (CO), nitrogen oxides (NO and/or NO2, usually referred to as NOx), sulfur dioxide (SO2), ground-level ozone (O3), particulate matter (including things like soot, dust, asbestos fibers, pesticides, and metals), and lead (Pb). Petroleum-fueled vehicles, engines, and industrial processes directly produce the vast majority of CO and NOx in the atmosphere. They are also the principal source of gaseous hydrocarbons (also called volatile organic compounds), which combine with NOx in sunlight to create ozone. Ozone, while important for blocking ultraviolet rays in the upper atmosphere, is also a key component of urban smog and creates human health problems when present in the lower atmosphere. Sulfur dioxide is a trace component of crude oil, and can cause acid rain when released into the air at oil refineries or petroleum power plants. Particulate matter is directly emitted in vehicle exhaust and can also form from the reaction of exhaust gases with water vapor and sunlight. Finally, leaded gasoline is a huge contributor of lead to the atmosphere, and the use of unleaded gasoline has decreased lead concentrations dramatically. The EPA and the World Bank are working to encourage the phaseout of leaded gasoline worldwide.

Petroleum-fueled transportation and coal-burning power plants are considered the chief causes of global warming, [11]. Excess amounts of carbon dioxide (CO2), methane, and NOx, among other gases, trap heat in the atmosphere and create the greenhouse effect. CO2 is a main constituent of petroleum fuel exhaust, even though it is not toxic and therefore not classified as a pollutant. About one-third of the CO2 emitted into the atmosphere every year comes from vehicle exhaust. Methane, although usually associated with natural gas, is also emitted whenever crude oil is extracted, transported, refined, or stored.

In summary of the foregoing, the oil retraction and production directly affect human life. Damages include air and water pollution as well as soil contamination. Humans are affected by environmental devastation due to damaging to vegetation, livestock, and to the health of the human body itself. Oil spills interfere with the normal working of power stations and desalination plants that require a continuous supply of clean seawater and with the safe operation of coastal industries and ports.

In [5], a Generalized Net (GN; see [1, 3]) model of a petrochemical plans is described. Now, we construct a GN-model of the process of evaluation of the environmental impact of refinery activity.

All notations, related to the GNs, are used as given in [1, 3].

2 Generalized net model

The GN-model (see Figure 1), contains $n + 4$ transitions and $5n + 11$ places, where n is the number of the separate units in the plant.

Initially, token δ stays in place q_2 with an initial and current characteristic

"crude oil, quantity, quality",

The separate transitions of the GN-model have the following forms.

$$Z_1 = \langle \{l_0\}, \{l_1, l_2, l_3, l_4\}, \begin{array}{c|cccc} & l_1 & l_2 & l_3 & l_4 \\ \hline l_0 & true & true & true & true \end{array} \rangle.$$

Token ν from place l_0 splits to four tokens σ_0, α_0, π, γ_0 that enter places l_1, l_2, l_3, l_4, respectively, with characteristics:

"total evaluation of area polution in the region of the refinery port",

"evaluation of soil and water polution in the region of the refinery port",

"crude oil quality supplied to refinery units",

"evaluation of air polution in the region of the refinery port".

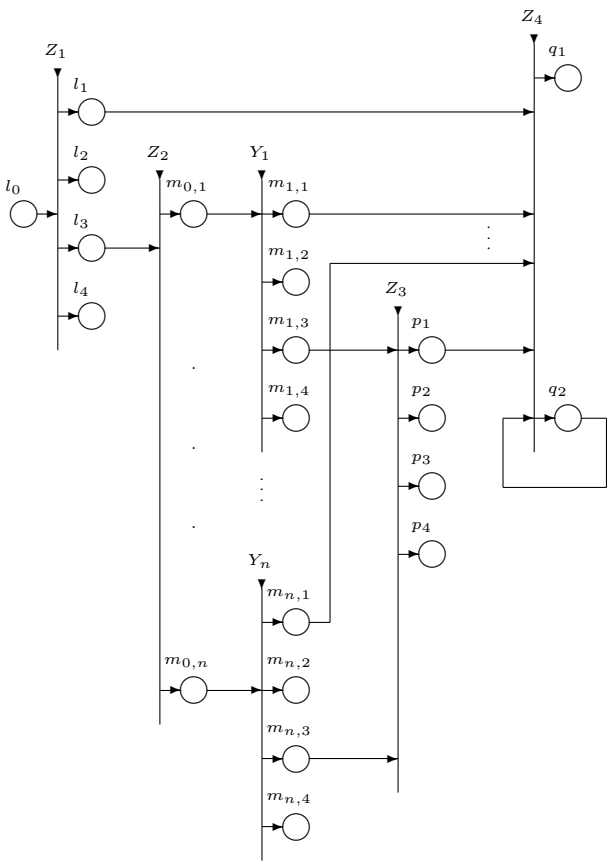

Figure 1: A GN-model

$$Z_2 = \langle \{l_3\}, \{m_{0,1}, ..., m_{0,n}\}, \begin{array}{c|ccc} & m_{0,1} & ... & l_{0,n} \\ \hline l_3 & true & ... & true \end{array} \rangle.$$

Token π from place l_3 splits to n tokens π_1, ... π_n that enter places $m_{0,1}, ..., m_{0,n}$, respectively, with characteristics:

"distribution of cruid oil amoung process first unit",

. . .

"distribution of cruid oil amoung process n-th unit".

Fof each i $(1 \leq i \leq n)$ transition Y_i has the form.

$$Y_i = \langle \{m_{0,i}\}, \{m_{i,1}, m_{i,2}, m_{i,3}, m_{i,4}\}, \begin{array}{c|cccc} & m_{i,1} & m_{i,2} & m_{i,3} & m_{i,4} \\ \hline m_{0,i} & true & true & true & true \end{array} \rangle.$$

Token π_i from place $m_{0,i}$ splits to four tokens $\sigma_{i,0}$, $\alpha_{i,0}$, $\pi_{i,0}$ and $\gamma_{i,0}$ that enter places $m_{i,1}, m_{i,2}, m_{i,3}, m_{i,4}$, respectively, with characteristics:

"total evaluation of area polution in the region of the i-th unit",

"evaluation of soil and water polution in the region of the i-th unit",

"finished product of the i-th unit storage",

"evaluation of air polution in the region of the i-th unit".

$$Z_3 = \langle \{m_{1,3}, ..., m_{n,3}\}, \{p_1, p_2, p_3, p_4\}, \begin{array}{c|cccc} & p_1 & p_2 & p_3 & p_4 \\ \hline m_{1,3} & true & true & true & true \\ \vdots & \vdots & \vdots & \vdots & \vdots \\ m_{n,3} & true & true & true & true \end{array} \rangle.$$

All tokens π_1, ..., π_n are unite in one (abstract) token, that splits to four tokens σ_1, α_1, π_1 (the union of the original tokens) and γ_1 that enter places p_1, p_2, p_3, p_4, respectively, with characteristics:

"total evaluation of all storage tanks polution",

"evaluation of the polution of the soil and water in the region of the storage tanks",

"total finished products in the tanks",

"evaluation of the polution of the air in the region of the storage tanks".

$$Z_4 = \langle \{l_1, m_{1,1}, ..., m_{n,1}, p_1, q_2\}, \{q_1, q_2\}, \begin{array}{c|cc} & q_1 & q_2 \\ \hline l_1 & false & true \\ m_{1,1} & false & true \\ \vdots & \vdots & \vdots \\ m_{n,1} & false & true \\ p_1 & false & true \\ q_2 & true & true \end{array} \rangle.$$

All tokens σ_0, $\sigma_{1,0}$, ... $\sigma_{n,0}$, σ_1 are unite with token δ in the latest token in place q_2 with the above mentioned chatacteristic. At each time-step, this token splits to two tokens δ (the original token) and δ' that enters place q_1 with characteristic

"total evaluation of the polution for a definite period".

The so-constructed GN model can become in future a subject of formal verification, using ideas from [1, 6].

3 Conclusion

A GN model of the process of evaluation of the environmental impact of refinery activity is developed. As shown, there is no doubt that the oil retraction and production directly affect human life. Damages include air and water pollution, as well as soil contamination. Humans are affected by environmental devastation due to damaging to vegetation, livestock, and to the health of the human body itself. Oil spills interfere with the normal working of power stations and desalination plants that require a continuous supply of clean seawater and with the safe operation of coastal industries and ports. In this line of thoughts, the constructed here GN model might be of a high interest for the process of evaluation of the environmental damages of a refinery activity. The model gives the possibility that information about the processes of soil, water and air pollution get collected in different units within a particular period of the refinery activity, and to be further analyzed in details.

References

[1] Atanassov, K. *Generalized Nets.* World Scientific, Singapore, 1991.

[2] Atanassov, K., *Intuitionistic Fuzzy Sets,* Springer, Heidelberg, 1999.

[3] Atanassov, K. *On Generalized Nets Theory,* "Prof. M. Drinov" Publ. House, Sofia, 2007.

[4] Atanassov, K., *On Intuitionistic Fuzzy Sets Theory,*Springer, Berlin, 2012.

[5] Stratiev, D., I. Marinov, T. Pencheva, K. Atanassov, Generalized net model of an oil refinery, *Proc. of 12th Int. Workshop on Generalized Nets,* 17 June 2012, Burgas, 10–16.

[6] Todorova, M. Construction of Correct Object-Orientated Programs via Building their Generalized Nets Models, *Annual of "Informatics Section, Union of Scientists in Bulgaria,* Vol. 4, 2011, 1–28 (In Bulgarian).

[7] `http://www1.american.edu/ted/projects/tedcross/xoilpr15.htm`

[8] `http://www.crudeoilbiz.com/index.shtml`

[9] `http://www.eolss.net/Sample-Chapters/C08/E6-185-18.pdf`

[10] `http://www.epa.gov/sectors/pdf/oil-gas-report.pdf`

[11] `http://www.pollutionissues.com/Na-Ph/Petroleum.html`