Eleventh Int. Workshop on GNs and
Second Int. Workshop on GNs, IFSs, KE
London, 9-10 July 2010, 1-6

Generalized Net Model of Using Data Mining Techniques for Process of Undergraduate Matriculation in a Digital University

A. Shannon[1], E. Sotirova[2], D.Orozova[3]
[1] Warrane College, University of New South Wales, Kensington, 1465, Australia, email: *tony@warrane.unsw.edu.au*
[2] Prof. Asen Zlatarov University, 8000 Burgas, Bulgaria, e-mail: *esotirova@btu.bg*
[3] Burgas Free University, 8000 Burgas, Bulgaria, e-mail: *orozova@bfu.bg*

Abstract: Data mining techniques are used in the area of undergraduate matriculation process in a digital university to better manage applicants recruitment efforts. These techniques determine how likely a particular student matriculate based on their interests, geographic location, and scholastic ability. Predicting allows to focus resources of the university staff to those applicants most likely to attend. The present paper describes the model of the applying data mining tools for the undergraduate matriculation process in a digital university. For the purpose we use Generalized Nets. The opportunity of using GNs as a tool for modelling such process is analyzed as well.

Keywords: Generalized nets, Modelling, Data mining tools, Digital university, E-learning.

1 Introduction

In a series of papers collected in the books [5, 6] the process of functioning of the abstract university was described using the apparatus of Generalized nets [1, 2]. In [3, 4, 7, 8, 9] were discussed different data mining tools related to the e-learning process and information systems in an university. The present paper describes the generalized net model of the undergraduate matriculation process in a digital university and applying data mining tools for the admission of the students into the university.

Matriculation entitles a student to pursue the educational programme to which he/she was admitted, and accords the privileges of access to the student services and facilities on the University. All students must matriculate with the University at the beginning of their period of study, and thereafter at the start of each academic session. Essentially, matriculation is the mechanism whereby students confirm their contractual relationship with the University and the University satisfies itself and students likewise, that the information held on the student record system is correct.

2 A GN-model

The GN-model (see Fig. 1) contains 8 transitions and 26 places, collected in five groups and related to the five types of the tokens that will enter respective types of places:
α - tokens and l-places represent the process of the applying the data mining tool,
β - tokens and t-places represent the criteria for the restricting data mining tool and choosing the property data mining tool,
γ - tokens and s-places represent the applicants and their activities,
δ - tokens and p-places represent the university resources,
ε - tokens and k-places represent the criterions for estimation applicant works.

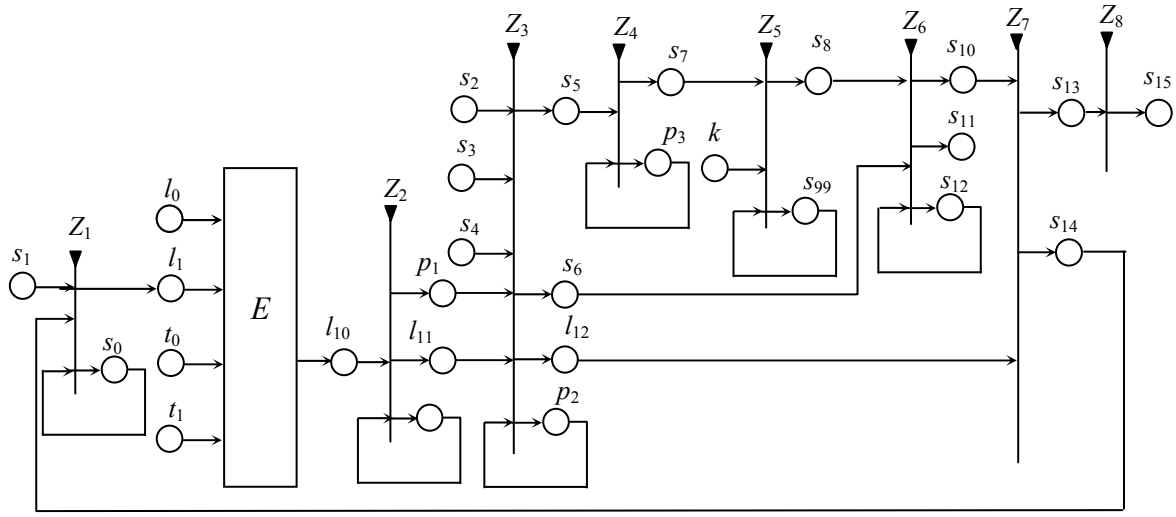

Fig. 1: GN model of the applying data mining tools for the matriculation in a digital university

Initially, the tokens γ_0, δ_0, δ_2 and δ_3 stay in places s_0, p_0, p_2, p_3. They will be in their own places during the whole time during which the GN functions. While they may split into two or more tokens, the original token will remain in its own place the whole time. The original tokens have the following initial and current characteristics:

- γ_0-token: *"Information for the applicants: Input number, Name, Address, Age, Sex, School, Total score, Matriculation"* (in place s_0);
- δ_0-token: *"University specialties"* (in place p_0);
- δ_2-token: *"University information system"* (in place p_2);
- δ_3-token: *"Rooms for examinations"* (in place p_3).

Below we shall omit these characteristics in descriptions of the separate transitions. If ω is one of these tokens that can be split, then the new tokens will be noted by ω', ω", and so on.

E is the GN that represents the process of the applying data mining tools and it is described in [4]. As a result of the work of the net E the evaluation of the current data mining tool is obtained. It enters place l_{10} and via transition Z_2 enter place p_0.

The α_0-token with characteristic

"Initial hypothesis"

enters the net via place l_0.

The α-token that enters place l_{10} obtain characteristic

"Goal, data mining tools, evaluation of the data mining tool".

Tokens β_0 and β_1 enter the net via places t_0 and t_1 respectively. These tokens have initial characteristics

"New data mining tool"

in place t_0,

and *"Criteria for the restricting data mining tool"*

in place t_1.

In the first time-moment, there is one γ_1-token that is located in place s_1 with initial characteristic

"Applicants",

In the first time-moment, there is one γ_2-token that is located in place s_2 with initial characteristic

"Candidate students",

one γ_3-token that is located in place s_3 with initial characteristic

"The students who stop their studies in a university and have to matriculate again",

and one γ_4-token that is located in place s_4 with initial characteristic

"The students who matriculate by school-leaving examination".

Token χ enters place k with initial characteristic

"Criteria for estimating the results from the examination".

The GN contains the following set of transitions:

$$A = \{ Z_1, Z_2, Z_3, Z_4, Z_5, Z_6, Z_7\},$$

and they represent respectively:

- Z_1 – The activities of the of the applicants;
- Z_2 – Determination of the university specialities for the current year based of the data mining model;
- Z_3 – Registration of the candidate students;
- Z_4 – Passing examinations;
- Z_5 – Process of evaluation candidate students' works;
- Z_6 – Ordering of candidate students;
- Z_7 – Payment of the fees.
- Z_8 – Registering the students of the student' system in university.

The forms of the transitions are the following.

$$Z_1 = <\{s_1, s_0\}, \{l_1, s_0\}, r_1, \vee(s_1, s_0)>$$

where:

$$r_1 = \begin{array}{c|cc} & l_1 & s_0 \\ \hline s_0 & W^s_{0,1} & True \\ s_1 & False & True \end{array},$$

$W^s_{0,1}$ = "There are applicants for registration".

The γ_1-token that enters place s_0 (from place s_1) unites with γ_0-token (in place s_0). When the predicate $W^s_{0,1}$ has truth-value "True", token γ_0-token generates α_1-token that enters place l_1 with characteristic

"Initial data".

$$Z_2 = <\{l_{10}, p_0\}, \{p_0, p_1, l_{11}\}, r_2, \wedge(l_{10}, p_0)>$$

where:

$r_2 =$

	p_0	p_1	l_{11}
l_{10}	*True*	*False*	*True*
p_0	*True*	$W^p_{0,1}$	*False*

,

$W^p_{0,1}$ = "The specialities for the current year are determined".

The α-token from place l_{10} splits into two tokens that enter places p_0 and l_{11} and these new tokens do not obtain any new characteristics. When the predicate $W^p_{0,1}$ has truth-value "True", token δ_0-token generates δ_1-token that enters place p_1 with characteristic

"University specialties for the current year".

$$Z_3 = <\{s_2, s_3, s_4, p_1, p_2, l_{11}\}, \{s_5, s_6, l_{12}, p_2\}, r_3, \vee(s_2, s_3, s_4, p_1, p_2, l_{11})>$$

where:

$r_3 =$

	s_5	s_6	l_{12}	p_2
s_2	*False*	*False*	*False*	*True*
s_3	*False*	*False*	*False*	*True*
s_4	*False*	*False*	*False*	*True*
p_1	*False*	*False*	*False*	*True*
p_2	$W_{2,5}$	$W_{2,6}$	*False*	*True*
l_{11}	*False*	*False*	*True*	*False*

,

$W_{2,5}$= "There are candidate students for examinations",
$W_{2,6}$= "There are students who matriculate by school-leaving examination".

Each token γ_2, γ_3 and γ_4 unites with token δ_2 in place p_2. When some of predicates $W_{2,5}$ and $W_{2,6}$ has truth-value "True", token δ_2 generates two δ-tokens that enter places s_5 and s_6 with characteristics:

"Documents to proceed with examination",
"Documents for school-leaving examination".

The α-token that enters place l_{12} (from place l_{11}) does not obtain new characteristic.

$$Z_4 = <\{s_5, p_3\}, \{s_7, p_3\}, r_4, \wedge(s_5, p_3)>$$

where:

$$r_4 = \begin{array}{c|cc} & s_7 & p_3 \\ \hline s_5 & False & True \\ p_3 & W_{3,7} & True \end{array},$$

$W_{3,7}$ = "The students pass the examination".

When predicate $W_{3,7}$ has truth-value "True", the γ-token enters place s_7 with characteristic *"Results from the examination"*.

$$Z_5 = <\{s_7, k, s_9\}, \{s_8, s_9\}, r_5, \vee (\wedge (s_7, k), s_9)>$$

where:

$$r_5 = \begin{array}{c|cc} & s_8 & s_9 \\ \hline s_7 & False & True \\ k & False & True \\ s_9 & W_{9,8} & True \end{array},$$

$W_{9,8}$ = "The student pass the examination".

The γ-token that enters place s_9 obtains characteristic *"Estimations from the examination"*.

The γ-token that enters place s_8 (from place s_9) do not obtain new characteristic.

$$Z_6 = <\{s_6, s_8, s_{12}\}, \{s_{10}, s_{11}, s_{12}\}, r_6, \vee (\wedge (s_6, s_8), s_{12})>$$

where:

$$r_6 = \begin{array}{c|ccc} & s_{10} & s_{11} & s_{12} \\ \hline s_6 & False & False & True \\ s_8 & False & False & True \\ s_{12} & W_{12,10} & W_{12,11} & True \end{array},$$

$W_{12,10}$ = "Student have to enroll in the university";

$W_{12,11} = \neg W_{12,10}$.

The γ-tokens entering places s_{10}, s_{11} and s_{12} obtain characteristics respectively *"Matriculated students"*, *"Withdrawn students"*, *"List of evaluations of the candidate students"*.

$$Z_7 = <\{s_{10}, l_{12}\}, \{s_{13}, s_{14}, l_{13}\}, r_7, \vee (s_{10}, l_{12})>$$

where:

$$r_7 = \begin{array}{c|ccc} & s_{13} & s_{14} & l_{13} \\ \hline s_{10} & True & True & False \\ l_{12} & False & False & True \end{array},$$

The γ-tokens entering places s_{13} and s_{14} obtain characteristic *"Matriculated students, students' fees, students' documents"*.

The α-token entering place l_{13} does not obtain new characteristic.

$$Z_8 = <\{ s_{13}\},\{ s_{15}\},\ \begin{array}{c|c} & s_{15} \\ \hline s_{13} & True \end{array} \vee (s_{13})>.$$

The tokens entering place l_{15} not obtain new characteristics.

3 Conclusion

The present paper describes generalized net model of the applying data mining techniques in the undergraduate matriculation process in a digital university. For the purpose we use Generalized Nets. The opportunity of using GNs as a tool for modelling such process is analyzed as well. The model has the purpose to optimize the functioning of the University by the creation of reliable information environment for monitoring and management of the quality of university education.

References

[1] Atanassov, K. Generalized nets, World Scientific, Singapore, New Jersey, London 1991.

[2] Atanassov, K. On Generalized Nets Theory, "Prof. M. Drinov"Academic Publishing House, Sofia, 2007.

[3] Orozova, D., E. Sotirova, P. Chountas, Generalized Net Model of the Knowledge Discovery in Medical Databses, International Journal BIOautomation, Vol. 13 (4), 2009, 281-288.

[4] Orozova, D., E. Sotirova, Generalized net model of the applying data mining tools, 10th International Workshop on Generalized Nets, IWGN'2009, 22-26.

[5] Shannon, A., D. Orozova, E. Sotirova, M. Hristova, K. Atanassov, M. Krawczak, P. Melo-Pinto, R. Nikolov, S. Sotirov, and T. Kim, Towards a Model of the Digital University: A Generalized Net Model for Producing Course Timetables and for Evaluating the Quality of Subjects, Intelligent Systems: From Theory to Practice, SCI 299, Springer-Verlag Berlin Heidelberg 2010, 373–381

[6] Shannon, A., K. Atanassov, E. Sotirova, D. Langova-Orozova, M. Krawczak, P. Melo-Pinto, I. Petrounias, T. Kim, Generalized Nets and Information Flow Within a University, Warszawa, 2007.

[7] Shannon, A., K. Atanassov, E. Sotirova, D. Langova-Orozova, M. Krawczak, P. Melo-Pinto, I. Petrounias, T. Kim, Generalized Net Modelling of University Processes. KvB Visual Concepts Pty Ltd, Monograph No.7, Sydney, 2005.

[8] Shannon, A., D. Orozova, E. Sotirova, K. Atanassov, M. Krawczak, P. Melo-Pinto, R. Nikolov, S. Sotirov, T. Kim, Towards a Model of the Digital University: A Generalized Net Model for Producing Course Timetables, IEEE Conference Intelligent Systems

[9] Sotirova, E., K. Dimitrova, R. Papancheva, A Generalized Net Model for Analysis of Students Evaluations by Data Mining Techniques in the Digital University, 10th International Workshop on Generalized Nets, IWGN'2009, 41-46.