Eleventh Int. Workshop on GNs and
Second Int. Workshop on GNs, IFSs, KE
London, 9-10 July 2010, 27-33

Generalized Net Model of the Students' Knowledge Assessments Using Multilayer Perceptron with Intuitionistic Fuzzy Estimations

I. Dimitrov, I. Jonova, V. Bineva, E. Sotirova*, S. Sotirov
University "Prof . Asen Zlatarov" – Burgas, Bulgaria
e-mail: *esotirova@btu.bg*

Abstract: The paper presents a generalized net model of the multilayer perceptron (MLP) that evaluates the students' answers based on defined set criterions. To be involved in practice there are used evaluation in intuitionistic fuzzy form about the students' knowledge. This is proper to be used as a basic element for e-learning systems' building.

Keywords: Generalized Net, Intuitionistic Fuzzy Sets, Multilayer Perceptron, e-Learning.

1 Introduction

Within the context of e-learning, the information exchange between the education and training system and the student is performed electronically. The student obtains information on a given topic at his/her local machine. After this the student's acquisition of knowledge can be rated by asking appropriate questions and problems, in order to pass on to the next topic of training.

It is based on [14]. Generalized Nets (GNs, see [2, 3]) are used to describe the process of student assessment [7, 8, 9, 10, 13]). The evaluations to cope with the varying student background on different themes are represented in intuitionistic fuzzy form; (for the concept of Intuitionistic Fuzzy Set (IFS, see [1]).

In [11] the process of evaluation of the problems solved by students is described by Generalized Nets. The paper [9] describes the process of evaluation by lecturers of the tasks presented by students. In [10] a generalized net is used to construct a model which describes of the process of evaluation by lecturers. In [11] is constructed a generalized net that corresponds to a model which describes the standardization of the process of evaluation by lecturers. In [12] the process of evaluation of student's course is described. The evaluation of student's course is a function of the student's evaluations from examination of the course.

The aim of the present paper is to use the techniques of MPL and generalized net to model the process of e-learning and to assess the students' knowledge on relevant topics in intuitionistic fuzzy form. The students fill in the closed tests with *m* questions (with tree possible answers for the each question: a; b or c). The evaluation is formed on the basis of these answers.

These assessments, which estimate the degree of the assimilation (μ) and the non-assimilation (ν) of the information obtained, are represented by ordered pairs $<\mu, \nu>$ of real numbers from the set $[0,1]\times[0,1]$.

The degree of uncertainty π=1-μ-ν represents those cases where the student is currently unable to answer the question asked and needs additional information. Everywhere the ordered pairs have been defined in the sense of intuitionistic fuzzy sets.

2 Intuitionistic fuzzy logic

Intuitionistic Fuzzy Sets (IFSs) [1] are defined as extensions of ordinary fuzzy sets. All results which are valid for fuzzy sets can be transformed here too. Also, all research, for which the apparatus of fuzzy sets can be used, can be used to describe the details of IFSs.

On the other hand, there have been defined over IFSs not only operations similar to those of ordinary fuzzy sets, but also operators that cannot be defined in the case of ordinary fuzzy sets.

Let a set E be fixed. An IFS A in E is an object of the following form:

$$A = \{<x, \mu_A(x), \nu_A(x)> | \ x \in E\},$$

where functions $\mu_A : E \rightarrow [0, 1]$ and $\nu_A : E \rightarrow [0, 1]$ define the degree of membership and the degree of non-membership of the element $x \in E$, respectively, and for every $x \in E$:

$$0 \leq \mu_A(x) + \nu_A(x) \leq 1$$

For every $x \in E$, let

$$\pi_A(x) = 1 - \mu_A(x) - \nu_A(x).$$

Therefore, the function π determines the degree of uncertainty.

Obviously, for every ordinary fuzzy set $\pi_A(x) = 0$ for each $x \in E$, these sets have the form:

$$\{<x, \mu_A(x), 1-\mu_A(x)> | \ x \in E\}.$$

3 A GN-model

The GN-model [1, 2] (see Fig. 1) contains 4 transitions and 12 places.

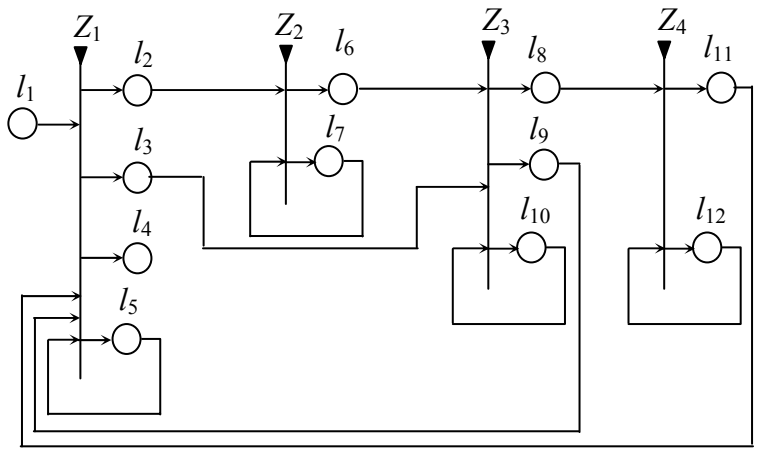

Fig. 1. GN model of the students' knowledge assessments using MLP

Initially, the tokens β_1 and β_2 stay in places l_5 and l_{10}. They will be in their own places during the whole time during which the GN functions. While they may split into two or more tokens, the original token will remain in its own place the whole time. The original tokens have the following initial and current characteristics:

- β_1-token: *"University information system"* (in place l_5);
- β_2-token: *"Multilayer Perceptron (MLP)"* (in place l_{10}).

Below we shall omit these characteristics in descriptions of the separate transitions. If δ is one of these tokens that can be split, then the new tokens will be noted by δ', δ", and so on.

α_i-token (i = 1, 2,…, n, where n is number of the students) enters the net via place l_1 with initial characteristic

"student i".

The GN contains the following set of transitions:

$$A = \{ Z_1, Z_2, Z_3, Z_4 \},$$

and they represent respectively:

- Z_1 – The activities University information system;
- Z_2 – Passing examinations;
- Z_3 – Process of the evaluation of the students' tests by the MLP;
- Z_4 – Calculating the final assessments for the course.

The forms of the transitions are the following.

$$Z_1 = <\{l_1, l_5, l_9, l_{11}\}, \{ l_2, l_3, l_4, l_5\}, \begin{array}{c|cccc} & l_2 & l_3 & l_4 & l_5 \\ \hline l_1 & False & False & False & True \\ l_5 & W_{5,2} & W_{5,3} & W_{5,4} & True \\ l_9 & False & False & False & True \\ l_{11} & False & False & False & True \end{array}, \vee(l_1, l_5, l_9, l_{11})>$$

$W_{5,2} = W_{5,3}$ = "The test for the current student is loaded";
$W_{5,4}$ = "The assessment for the i-th student is ready".

The α-tokens that enter places l_2, l_3 and l_4 obtain characteristic respectively:

"student i, test",
"student i, test with true answers",
"student i, assessment".

$$Z_2 = <\{l_2, l_7\}, \{l_6, l_7\}, \begin{array}{c|cc} & l_6 & l_7 \\ \hline l_2 & False & True \\ l_7 & W_{7,6} & W_{7,7} \end{array}, \vee(l_2, l_7)>$$

$W_{7,6}$ = "The i-th student completes the test";
$W_{7,7} = \neg W_{7,6}$.

The α-tokens that enter places l_6 and l_7 obtain characteristic respectively:

"student i, test, final answers",
"student i, test, current answers".

$$Z_3 = <\{l_3, l_6, l_{10}\}, \{l_8, l_9, l_{10}\}, \begin{array}{c|ccc} & l_8 & l_9 & l_{10} \\ \hline l_3 & False & False & True \\ l_6 & False & False & True \\ l_{10} & W_{10,8} & W_{10,9} & True \end{array}, \vee(\wedge(l_3, l_6), l_{10}), >$$

$W_{10,8} = W_{10,9}$ = "The test of the i-th student is evaluated from the MLP".

The α-tokens that enter places l_8 and l_9 obtain characteristic:

"student i, test, answers, assessment".

$$Z_4 = <\{l_8, l_{12}\}, \{l_{11}, l_{12}\}, \begin{array}{c|cc} & l_{11} & l_{12} \\ \hline l_8 & False & True \\ l_{12} & W_{11,12} & W_{12,12} \end{array}, \vee(l_8, l_{12})>$$

$W_{11,12}$ = "There are students who still aren't evaluated";

$W_{12,12} = \neg W_{11,12}$.

The α-tokens that enter places l_{11} and l_{12} obtain characteristic, respectively:

"Final calculated assessment for the test",

"Current calculated assessment for the test".

4 Neural network

In [4, 5, 6] different types of neural networks are described. Many of them are used for image recognition (symbols, classes, knowledge etc.). Neural network can be used for obtaining intuitionistic fuzzy evaluation. In the present paper, we use Multilayer Perceptron (MLP) with structure as illustrated on Fig. 2. In the inputs of the neural network are the students' answers and the positive criterions for evaluation the respective question (the true answers for it).

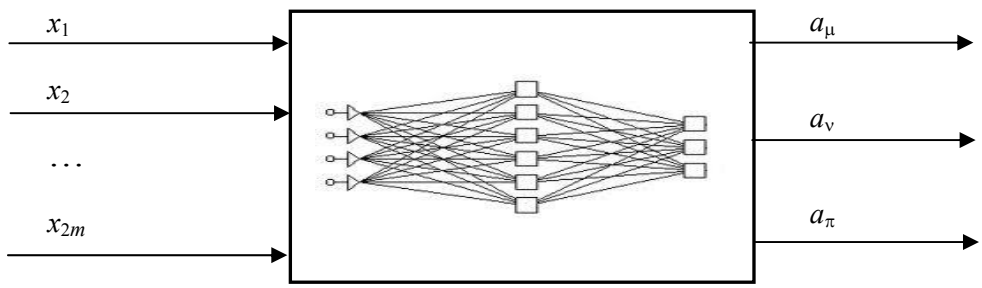

Fig. 2. Multilayer Perceptron

On the inputs $x_1, \ldots x_m$ are students' answers of the questions from the test. On the inputs $x_{m+1}, \ldots x_{2m}$ are correct answers of the questions from the test.

Outputs a_μ , a_ν and a_π obtain intuitionistic fuzzy evaluations. The first output gives the degree of the assimilation of the information μ; the second - degree of a non assimilation of the information ν, and the third - degree of uncertainty $\pi = 1-\mu-\nu$.

For the realization of our purpose was used two-layer MLP (Fig. 3).

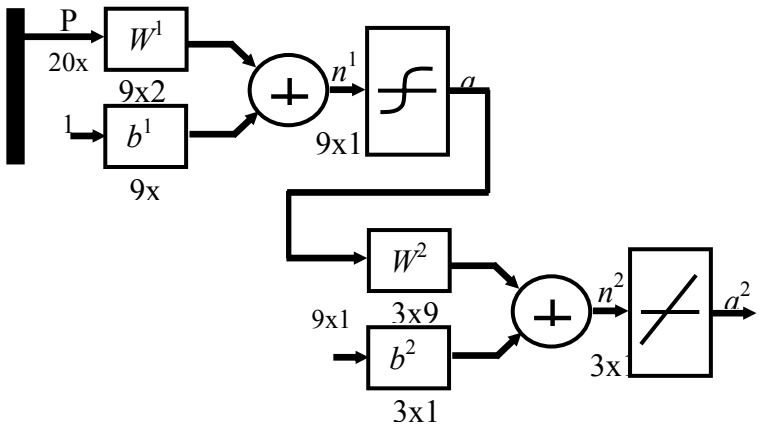

Fig. 3. MLP structure

The P_{20x1} vector was fed at the input, and the T_{3x1} was produced at the output. The input layer consisted of 9 neurons as the standard logic function (logsig) was used as a transfer function. The output of the second layer was defined by the equation a^1=logsig(pw^1+b). The output layer was with a linear transfer function and was defined by the equation a^2= purelin ((logsig (pw^1+b^1)w^2+b^2).

The network learning was performed in a MATLAB environment by means of the BackPropagation algorithm with a set mean square error of 1.10^{-5}.

At the beginning is done a statistics of the students' answers and after that is learned the neural network. Initially when still no information has been obtained, all estimations are given initial values of <0, 0>. When $k \geq 0$, the current (k+1)-st estimation is calculated on the basis of the previous estimations according to the recurrence relation $<\mu_{k+1}, \nu_{k+1}> = <\frac{\mu_k k+m}{k+1}, \frac{\nu_k k+n}{k+1}>$, where $<\mu_k, \nu_k>$ is the previous estimation, and <μ, ν> is the estimation of the latest measurement, for m, $n \in [0, 1]$ and $m + n \leq 1$. These values are used for training of neural network (Fig. 4).

During the neural network's test not only correct answers are given but also different ones (Table 1). The table consists of true (T), false (F) answers and questions without answers (blank).

Table 1

No.	The answers to each different question										μ	ν	π
1	T	T	T	T	T	T	T	T	T	T	0.9897	0.0002	0.0001
2	T		T	T	T	T	T	T	F	F	0.7905	0.1149	0.0895
3	F	F	T			T	F	T	T	T	0.5874	0.3142	0.1201
4	T	T	F		T	T	T		T	F	0.8543	0.0943	0.0597
5	T	T	T	F			T	T	F	T	0.7834	0.0891	0.1257
6	F	F	T	F	F		T	F	T		0.3775	0.5148	0.1098
7	T		T	T	T	T	F	F	F	T	0.6139	0.2604	0.1270

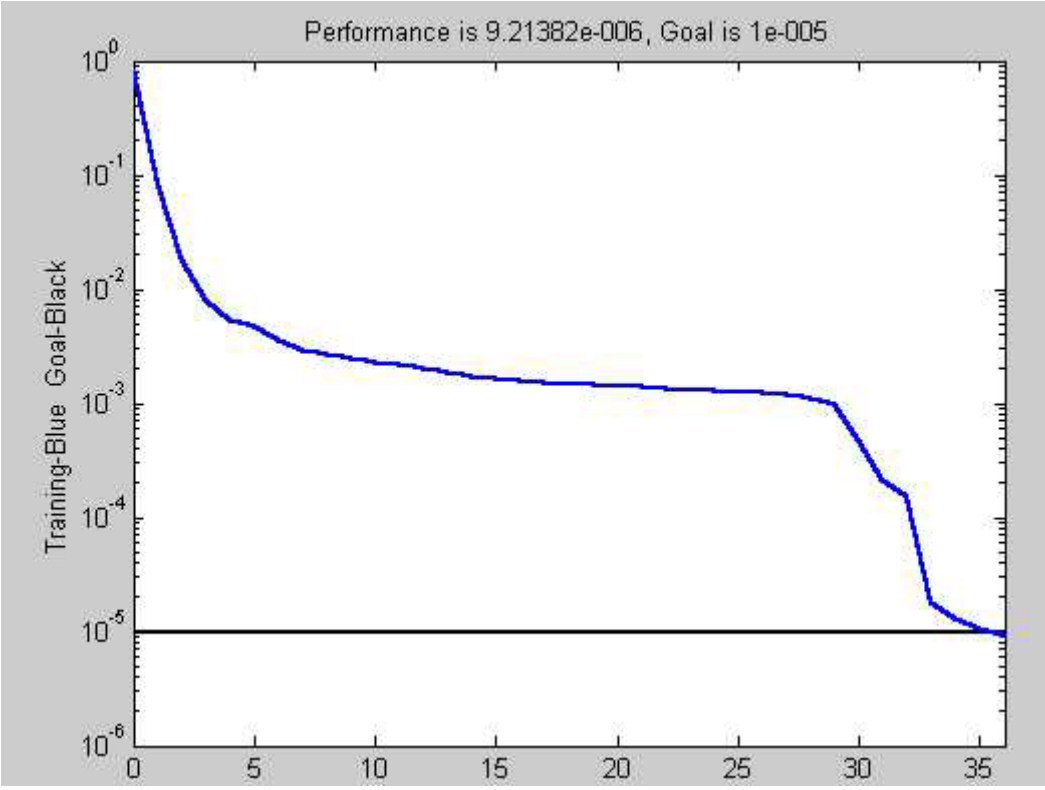

Fig. 4. Training of the MLP

Conclusion

- When on the neural network's input is given correct answer (that coincides with precursory set criterion), the degree of assimilation of the information μ is 1, and the degree of non assimilation of the information ν is 0 (row 1 of Table1);
- When a student gives correct answers for the half of questions in the test then the final evaluation has $\mu > 0.5$ (rows 2, 3, 4, 5 and 7);
- When a student gives incorrect answers for the half of questions in the test then the final evaluation has $\nu > 0.5$ (row 6);
- The examinee needs additional learning when the degree of the non assimilation of the information ν is ≥ 0.5 or uncertainty π is ≥ 0.5 (row 6).

The presented neural network determine the degree of assimilation, non assimilation and uncertainty in the students answers' evaluation. The evaluation is based on defined set criterions. The network could be used for the evaluation of the students' answers in the closed tests in e-learning. This is proper to be used as a basic element for e-learning systems' building. On the other hand we develop GN model for describing the process.

References

[1] Atanassov, K. Intuitionistic Fuzzy Sets, Springer, Heidelberg, 1999

[2] Atanassov, K. On Generalized Nets Theory. Prof. M. Drinov Academic Publ. House, Sofia, 2007.

[3] Atanassov, K., Generalized Nets. World Scientific, 1991.

[4] Bishop C. M., Neural networks for pattern recognition, Oxford university press, ISBN 0 19 853864 2 , 2000

[5] Haykin, S. "Neural Networks: A Comprehensive Foundation", Prentice Hall, N.J., 1999

[6] M.T.Hagan, H.B.Demuth, M.Beale, "Neural Network Design", PWS Publishing Company, Boston, 1996

[7] Melo-Pinto, P., T. Kim, K. Atanassov, E. Sotirova, A. Shannon and M. Krawczak, Generalized net model of e-learning evaluation with intuitionistic fuzzy estimations, Issues in the Representation and Processing of Uncertain and Imprecise Information, Warszawa, 2005, 241-249.

[8] Shannon, A., D. Langova-Orozova, E. Sotirova, I. Petrounias, K. Atanassov, M. Krawczak, P. Melo-Pinto, T. Kim. Generalized Net Modelling of University Processes. KvB Visual Concepts Pty Ltd, Monograph No. 7, Sydney, 2005.

[9] Shannon, A., E. Sotirova, I. Petrounias, K. Atanassov, M. Krawczak, P. Melo-Pinto, T. Kim, Intuitionistic fuzzy estimations of lecturers' evaluation of student work, First International Workshop on Intuitionistic Fuzzy Sets, Generalized Nets & Knowledge Engineering, University of Westminster, London, 6-7 September 2006, 44-47

[10] Shannon, A., E. Sotirova, I. Petrounias, K. Atanassov, M. Krawczak, P. Melo-Pinto, T. Kim, Generalized net model of lecturers' evaluation of student work with intuitionistic fuzzy estimations, Second International Workshop on Intuitionistic Fuzzy Sets, Banska Bystrica, Slovakia, 3 December 2006, Notes on IFS, Vol. 12, 2006, No. 4, 22-28.

[11] Shannon, A., E. Sotirova, K. Atanassov, M. Krawczak, P. Melo-Pinto, T. Kim, Generalized Net Model for the Reliability and Standardization of Assessments of Student Problem Solving with Intuitionistic Fuzzy Estimations, Developments in Fuzzy Sets, Generalized Nets and Related Topics. Applications. Vol. 2, System Research Institute, Polish Academy of Science, 2008, 249-256.

[12] Shannon, A., E. Sotirova, K. Atanassov, M. Krawczak, T. Kim, Generalized Net Model of a Student's Course Evaluation with Intuitionistic Fuzzy Estimations, Advanced Studies Contemporary Mathematics, Vol. 18 (2), 2009 (in press).

[13] Shannon, A., K. Atanassov, E. Sotirova, D. Langova-Orozova, M. Krawczak, P. Melo-Pinto, I. Petrounias, T. Kim, Generalized Nets and Information Flow Within a University, Warszawa, 2007.

[14] Sotirov, S., D. Orozova, E. Sotirova, Neural network for defining intuitionistic fuzzy sets in e-learning, Thirteen Int. Conf. on IFSs, Sofia, NIFS Vol. 15, 2009, 33-36.