Fourth Int. Workshop on GNs, Sofia, 23 Sept. 2003, 8-11

Generalized Net Model in use for medical diagnosing

Joseph G. Sorsich, Vihren E. Chakarov[1], Anthoni G. Shannon[2,3] and Krassimir T. Atanassov[1,2]

[1] Centre for Biomedical Engineering - Bulgarian Academy of Sciences,
Acad. G. Bonchev Str., Bl. 105, Sofia-1113, Bulgaria
e-mails: *vihren@bio.bas.bg* and *krat@bas.bg*

[2] KvB Institute of Technology, North Sydney, 2060, Australia,
e-mail: *tony@kvb.edu.au*

[3] Warrane College, University of New South Wales, Kensington, 1465, Australia
email: *tony@warrane.unsw.edu.au*

1 Introduction

It is a long and sometimes difficult way from the moment a patient enters a doctor's office to establishing the diagnosis and giving the appropriate treatment. The physician starts with taking the medical history from the patient himself or from the people accompanying him if he is unconscious, with speech difficulties or a young child. The medical history contains personal data /name, date of birth, address etc/, family history, past medical conditions and the present symptoms in their chronology. Then the physician makes a physical examination of all accessible organs and systems. The physician orders routine and sometimes more specialized tests and examinations which could help establish the diagnosis. The physician evaluates the data accumulated and concludes which of them are pathologic and to what extent, are they significant for establishing the causes for the current status of the patient and for the possible diagnosis. In this process of decision making the physician sort the data, keeping some pieces of information and ignoring others.

The practitioner must first cluster or link some or all of the collected signs and symptoms, and determine any emerging patterns, meaningful groups, and formulate hypothe-

ses. This phase is often referred to as hypothesis formulation (initial, preliminary diagnosis). The formulation of hypotheses or tentative conclusions helps focus further data collection efforts on a manageable group of possibilities.

During the next stage of diagnostic reasoning, the physician focuses on gathering data (laboratory tests, x-ray pictures, etc.) to support or reject the previously generated hypotheses.

Once the physician is satisfied that all reasonable explanations for the initial set of signs and symptoms have been thoroughly investigated, each hypothesis must be evaluated in the light of the new evidence that has been collected and a final diagnosis or conclusion reached.

On the course of the final phase of decision making the physician determines which explanation has the most supporting data and chooses this hypothesis as the diagnosis. On some cases, however, the clinician can only eliminate hypotheses until only the one with the highest probability remains.

The concept of a *Generalized Net* (GN) is described in [1].

2 A generalized net model

Here we shall construct a global GN-model for the purpose of diagnosing a definite disease entity. For used definitions and notations related see [1,2].

The tokens enter the GN with an initial characteristic "patient with signs and symptoms suggesting illness".

$$Z_1 =< \{l_1, l_4\}, l_2\}, \begin{array}{c|c} & l_2 \\ \hline l_1 & true \\ l_4 & true \end{array} > .$$

The tokens obtain the characteristic "a detailed patient's personal and family history, and a complete physical examination are essential" in place l_2.

$$Z_2 =< \{l_2\}, \{l_3, l_4\}, \begin{array}{c|cc} & l_3 & l_4 \\ \hline l_2 & W_{2,3} & W_{2,4} \end{array} >,$$

$W_{2,3} =$ "the signs and symptoms are suggestive of some common or rare disease",
$W_{2,4} = \neg W_{2,3}$.

The tokens obtain the characteristic "a combination of findings is necessary to establish an initial diagnosis" in place l_3 and they do not obtain any characteristic in place l_4 .

$$Z_3 =< \{l_3, l_{11}\}, \{l_5, l_6\}, \begin{array}{c|cc} & l_5 & l_6 \\ \hline l_3 & W_{3,5} & W_{3,6} \\ l_{11} & W_{11,5} & W_{11,6} \end{array} >,$$

$W_{3,5} = W_{11,5} =$ "there is confirmatory combination of findings",
$W_{3,6} = W_{11,6} = \neg W_{3,5}$.

The tokens obtain the characteristics "an initially reliable diagnosis is established" in place l_5 and "further examinations are necessary" in place l_6.

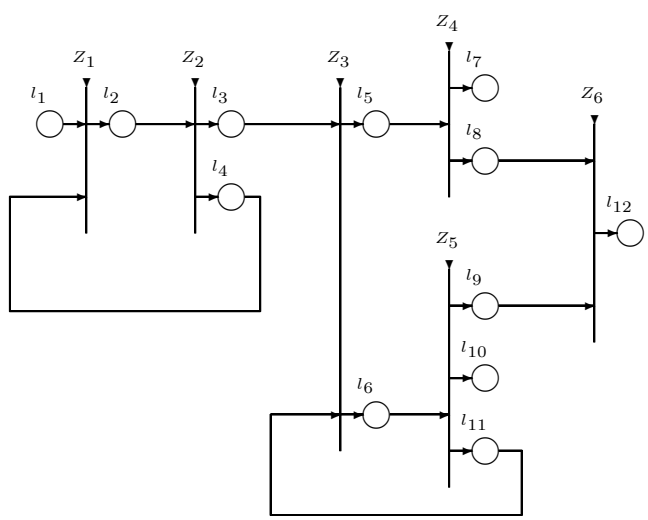

$$Z_4 =< \{l_5\}, \{l_7, l_8\}, \begin{array}{c|cc} & l_7 & l_8 \\ \hline l_5 & W_{5,7} & W_{5,8} \end{array} >,$$

$W_{5,7} =$ "there are no findings which cast doubt on the accepted diagnosis",
$W_{5,8} = \neg W_{5,7}$.

The tokens obtain the characteristics "the dignosis is confirmed" in place l_7 and "the diagnosis is doubtfull" in place l_8 .

$$Z_5 =< \{l_6\}, \{l_9, l_{10}, l_{11}\}, \begin{array}{c|ccc} & l_9 & l_{10} & l_{11} \\ \hline l_6 & W_{6,9} & W_{6,10} & W_{6,11} \end{array} >,$$

$W_{6,9} =$ "there are findings which cast doubt on the initial diagnosis",
$W_{6,10} =$ "the findings confirm the initial diagnosis",
$W_{6,11} =$ "the findings are not sufficient to confirm the initial diagnosis".

The tokens do not obtain any characteristic in places l_9 and l_{11} and they obtain the characteristic "the dignosis is confirmed" in place l_{10}.

$$Z_6 = < \{l_8, l_9\}, l_{12}\}, \begin{array}{c|c} & l_{12} \\ \hline l_8 & true \\ l_9 & true \end{array} > .$$

The tokens obtain the characteristic "the patient is referred to a specialist for further evluation" in place l_{12}.

References:

[1] Atanassov K. Generalized Nets. World Scientific, Singapore, New Jersey, London, 1991.

[2] Shannon A., J. Sorsich, K. Atanassov. Generalized Nets in Medicine. "Prof. M. Drinov" Academic Publishing House, Sofia, 1996.