Fifth Int. Workshop on GNs, Sofia, 10 Nov. 2004, 13-18

PRINCIPAL GENERALIZED NET MODEL OF AN EXCRETORY SYSTEM

Vihren E. Chakarov[1], Krassimir T. Atanassov[1] and Anthony G. Shannon[2,3]

[1] Centre for Biomedical Engineering - Bulgarian Academy of Sciences,
Acad. G. Bonchev Str., Bl. 105, Sofia-1113, BULGARIA
e-mails: *krat@bas.bg* and *vihren@bio.bas.bg*
[2] KvB Institute of Technology, North Sydney, 2060, AUSTRALIA
e-mail: *tony@kvb.edu.au*
[3] Warrane College, University of New South Wales, Kensington, 1465, AUSTRALIA
email: *tony@warrane.unsw.edu.au*

1 Introduction

The Generalized Nets (GNs; see [1]) are extensions of Petri nets and their other modifications. GNs are suitable tools for modelling and simulation of parallel real-time processes. In last years they have been used for modelling of different processes in medicine. There are more than 800 GN-models of the processes of medical diagnostic and a series of models of separate organs and systems of human body and of the human body as whole.

The idea for a GN-model of human body is discussed in [2, 3]. There it is shown that the human body can be GN-represented by a set of systems (interpreted as separate places of the net) and relations between them (interpreted by the transition condition predicates of the net).

The present GN-model represents the excretory system of the human body.

The excretory system is of vital importance for the organism. It maintains the fluid-electrolyte homeostasis and eliminates the metabolic end-products, as well as exogenous compounds which cannot be otherwise eliminated. It consists of two kidneys acting as blood plasma filters under high (arterial) pressure and reabsorbtion of the necessary for the organism substances filtrated in the primary urine, thus concentrating it to final urine. An urether starts from each kidney, taking constantly urine to a reservoir (urinary bladder) which is emptied voluntarily when full via a short channel called urethra. In man each kidney contains about 1×10^6 nephrones which are the main functional urine forming units.

The final urine also contains substances of vital importance, such as sodium, calcium and potassium ions, inorganic phosphorus and water. By their controlled elimination the kidneys participate in maintaining the fluid-electrolyte and alkaline-acid balance of the organism.

The kidneys also form two active substances: hormones rennin and erythropoietin. Rennin regulates arterial pressure and the circulating blood volume. Erythropoietin stimulates erythrocite production by the hematopoetic system.

2 GN-model

Here we represent a simplified GN-model of the excretory system that is considered as a whole and its relations with the neurons system for the voluntary evacuation of the urine are not considered in details, as well as the kidney's hormonal activity effects.

The GN contains 8 transitions that have the following forms (see Fig. 1).

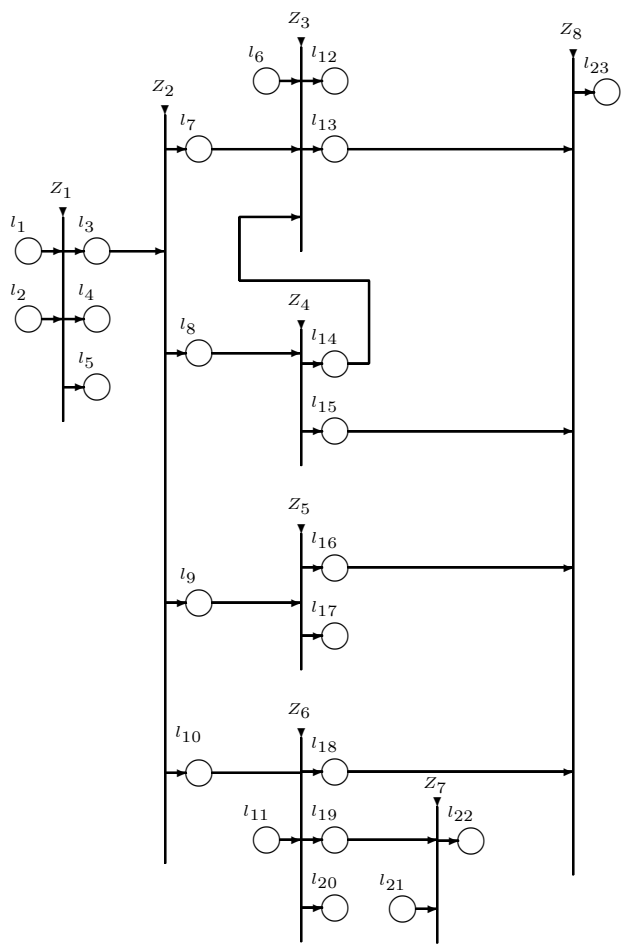

Fig. 1: GN-model

$$Z_1 = < \{l_1, l_2\}, \{l_3, l_4, l_5\}, \begin{array}{c|ccc} & l_3 & l_4 & l_5 \\ \hline l_1 & true & false & false \\ l_2 & false & true & true \end{array}, \wedge(l_1, l_2) > .$$

This transition represents the lung and it will be changed with an entire net of the respiratory system in a next research of the authors.

The token which initially is in place l_1 has initial characteristic:

"blood, current quantity, current composition, etc."

and the tokens which enter the net through place l_2 have initial characteristics

"O_2, quantity, etc".

The tokens obtain the characteristics

"blood, current quantity, current composition, etc."

in place l_3,

"H_2O, quantity, etc"

in place l_4, and

"CO_2, quantity, etc"

in place l_5.

$$Z_2 =< \{l_3\}, \{l_7, l_8, l_9, l_{10}\}, \begin{array}{c|cccc} & l_7 & l_8 & l_9 & l_{10} \\ \hline l_3 & true & true & true & true \end{array}, \vee(l_3) > .$$

The tokens obtain the characteristics

"blood entering in the gastrointestinal system, current quantity, current composition"

in place l_7,

"blood entering in the liver, current quantity, current composition, etc"

in place l_8,

"blood entering in the derm, current quantity, current composition, etc"

in place l_9, and

"blood entering in the respiratosy system, current quantity, current composition, etc"

in place l_{10}.

$$Z_3 =< \{l_6, l_7, l_{14}\}, \{l_{12}, l_{13}\}, \begin{array}{c|cc} & l_{12} & l_{13} \\ \hline l_6 & true & false \\ l_7 & false & true \\ l_{14} & false & true \end{array}, \wedge(l_6, \vee(l_6, l_7, l_{14}) > .$$

This transition represents the gastrointestinal system and it will be changed with an entire net in a next research (see [4]).

Tokens enter the net through place l_6 with initial characteristic:

"food, water, minerasl, etc, current quantity, current composition, etc".

The tokens obtain the characteristics

"faeces, current quantity, current composition, etc"

in place l_{12} and

"blood, current quantity, current composition, etc"

in place l_{13}.

The transition type shows that the presence of a token representing the blood is necessary, while the appearance of tokens representing other components (food, bile) is episodic.

$$Z_4 =< \{l_8\}, \{l_{14}, l_{15}\}, \begin{array}{c|cc} & l_{14} & l_{15} \\ \hline l_8 & true & true \end{array}, \vee(l_8) > .$$

This transition represents the liver and it will be changed with an entire net in a next research of ours.

The tokens obtain the characteristics

"bile, current quantity, current composition, etc"

in place l_{14} and

"blood, current quantity, current composition, etc"

in place l_{15}.

$$Z_5 =< \{l_9\}, \{l_{16}, l_{17}\}, \begin{array}{c|cc} & l_{16} & l_{17} \\ \hline l_9 & true & true \end{array}, \vee(l_9) > .$$

This transition represents the skin.

The tokens obtain the characteristics

"H_2O, salt and others, current quantity, current composition, etc"

in place l_{16} and

"blood, current quantity, current composition, etc"

in place l_{17}.

$$Z_6 =< \{l_{10}, l_{11}\}, \{l_{18}, l_{19}, l_{20}\}, \begin{array}{c|ccc} & l_{18} & l_{19} & l_{20} \\ \hline l_{10} & true & false & false \\ l_{11} & false & true & true \end{array}, \wedge(l_{10}, l_{11}) > .$$

This transition represents the excretory system, that, as we mentioned above, is unified for simplicity of the model. It also can be changed with an entire net in a next detailed research.

The present GN-model is oriented principally to the excretory system. For this reason the tokens which represent bolld obtain (in places $l_1, l_3, l_6, l_8, l_9, l_{13}, l_{15}, l_{16}$) as characteristics principally these blood parameters which are related to the excretory system. Therefore, the tokens entering place l_{10} have as characteristic the data, related to the status of the blood entering the kidney.

The tokens which enter the net through place l_{11} have initial characteristics

hormones from the endocrine system, quantity, composition, etc.

The tokens obtain the characteristics

"blood, current quantity, current composition, etc"

in place l_{18},

"urine, quantity, composition, etc"

in place l_{19}, and

"angiotensin, erytropoetin, derivates of vitD, etc, quantity, compositions, etc"

in place l_{20}.

$$Z_7 =< \{l_{19}, l_{21}\}, \{l_{22}\}, \begin{array}{c|c} & l_{22} \\ \hline l_{19} & true \\ l_{21} & true \end{array}, \wedge(l_{19}, l_{21}) > .$$

This transition represents the definitive urine. It also can be changed with an entire net in a next research.

The tokens which enter the net through place l_{21} have initial characteristics

"neurologic regulation of the excretory ways (pyelon, ureters, etc), quantity,

intensity, etc".

The tokens obtain the characteristic

"evacuated urine, current quantity, current composition, etc"

in place l_{22}.

$$Z_8 =< \{l_{13}, l_{15}, l_{16}, l_{18}\}, \{l_{23}\}, \begin{array}{c|c} & l_{23} \\ \hline l_{13} & true \\ l_{15} & true \\ l_{16} & true \\ l_{18} & true \end{array}, \vee(l_{13}, l_{15}, l_{16}, l_{18}) > .$$

The tokens obtain the characteristic

"blood, current quantity, current composition, etc"

in place l_1, as it is shouiwn above.

Places l_4, l_5 and l_{10} are output ones for the GN-model. The first two places are related with the environment, while the last one is related to other compartments of the body.

3 Conclusion

The so-constructed GN-model can be used for simulation of processes flowing in the excretory system of human body like maintenance of the homeostasis, drug effects of excreted by urine medicaments, toxic effects of extrinsic substances, etc.

If we use the hierarchical operators defined over the GNs (see, e.g., [1]) we can detailize the model. In this case we have to change the separate places of the GN-model (from [2, 3]) with new GN that will be a subnet of the whole GN. It will show the relations between the excretory system and the other human body systems.

References

[1] Atanassov K., Generalized Nets, World Scientific, Singapore, New Jersey, London, 1991.

[2] Atanassov K., V. Radeva, A. Shannon, J. Sorsich. Generalized Nets Interpretations of Ivan Dimitrov's Informational Theory of Diseases. "Prof. M. Drinov" Academic Publishing House, Sofia, 2001.

[3] Sorsich, J., A. Shannon, K. Atanassov. A global generalized net model of the human body. Proc. of the Conf. "Bioprocess systems'2000", 11-13 Sept. 2000, Sofia, IV.1-IV.4.

[4] Shannon, A., K. Atanassov, V. Chakarov, Generalized net model of the gastrointestinal system of the human body. Advanced Studies on Contemporary Mathematics, Vol. 10, 2005, No. 2, 101-110.

[5] V. Radeva, M. Krawczak and E. Choy. Review and bibliography on generalized nets theory and applications. Advanced Studies in Contemporary Mathematics, 4(2), pp. 173-199 (2002).