12th Int. Workshop on Generalized Nets
Burgas, 17 June 2012, 1–5

On the global operator G_2 over generalized nets

Dimitar G. Dimitrov[1,2]

[1] Faculty of Mathematics and Informatics, Sofia University
5 James Bourchier Str., Sofia, Bulgaria

[2] Institute of Biophysics and Biomedical Engineering
Bulgarian Academy of Sciences
105 Acad G. Bonchev Str., 1113 Sofia, Bulgaria
e-mail: dgdimitrov@fmi.uni-sofia.bg

Abstract: In this paper a new global operator G_2' is defined. G_2' extends G_2 and can be used on wider class of generalized nets. For a given GN E, the results of the work of E and $G_2'(E)$ are the same. The operator is defined in a way suitable for software implementation.
Keywords: Generalized net, Global operator, Formalization, GN Lite, GN IDE, Software implementation.
AMS Classification: 68Q85.

1 Introduction

Generalized nets (GNs) are an instrument for modeling and optimization of parallel and competitive processes [1, 2].

The operator aspect takes an important place in GN theory. Since 1982 many operators are defined and classified in six categories: global, local, hierarchical, reducing, extending and dynamic operators [3, 4, 5].

The global operators transform, according to a definite procedure, an entire given GN or all its components of a given type. Operator G_2 changes the form and the structure of a given GN E by shrinking it to a single transition, keeping only the input and the output places of E [2].

The algorithm for applying G_2 (and thus the software implementation of G_2) is not trivial and not yet formally defined. There are many cases that should be taken into account. For example, a given predicate may check whether a place, removed by G_2, contains a token.

In this paper a new global operator, G_2', is introduced. It retains the original idea of G_2, but can be formally defined with a simpler algorithm. For a given GN E, the results of the work of E and $G_2'(E)$ are the same (on every step of their functioning).

Proposed here GN operator is implemented in GN IDE - a graphical environment for visual editing and simulation of GN models [6, 7]. GN IDE is part of GN Lite - a software package for modeling and simulation with GNs [11]. GN Lite implements the current state of the most aspects of GN theory, compared to other software tools for GNs [11]. Its graphical environment has user-friendly interface which assists the user through the whole modeling process [6, 7]. Some of the features of GN Lite are the following:

- implements the algorithm for GN functioning;
- defines an XML format for describing GN models;
- provides a programming language for predicates and characteristic functions in GNs;
- supports integration of MatLab code into GN models;
- WYSIWYG editor of GN models;
- visual simulation of GN models.

Currently GN Lite supports GNTCFL and JavaScript as programming languages for predicates and characteristic functions in GN models [11]. The software implementation of the new operator supports JavaScript.

2 Formal definition of G_2'

The modified version of G_2 compresses a whole GN E to a net E' with two transitions (Figure 1). The first one has the topological structure of the sole transition in $G_2(E)$. The second transition has a single input and output place l^*. The original GN is contained as a characteristic in a token γ that loops in l^*. On each step of E's functioning the algorithm for GN functioning [8] is executed on E by the characteristic function of l^* and tokens in E' are updated to match the current state of E.

In order to make possible tokens to pass to output places in E' on the same step as Φ_{l^*} is executed, the new place l^*, as well as its corresponding transition Z_2 and the token γ have the highest priority among the other components in E'. This way the characteristic function for l^* is executed before the predicates in Z_1 are calculated. If a token α goes to some output place l (in E) on a given step of GN's functioning, the predicate of the arc between the input position, containing α, and l is evaluated as $true$.

Figure 1 illustrates the transformation of a sample GN by operator G_2'.

Token splitting and merging must not be enabled for E, e.g. operators $DD(2,1)$ and $DD(2,4)$ [2] must not be defined for the net.

G_2' can be defined formally in the following way:

$$G_2'(E) = \langle\langle\{Z_1, Z_2\}, \pi_A^*, \pi_L^*, c^*, f, *, *\rangle,$$
$$\langle K \cup \{\gamma\}, \pi_K^*, \theta_K^*\rangle, \langle T, t^o, t^*\rangle, \langle X^*, \Phi^*, b^*\rangle\rangle,$$

where:

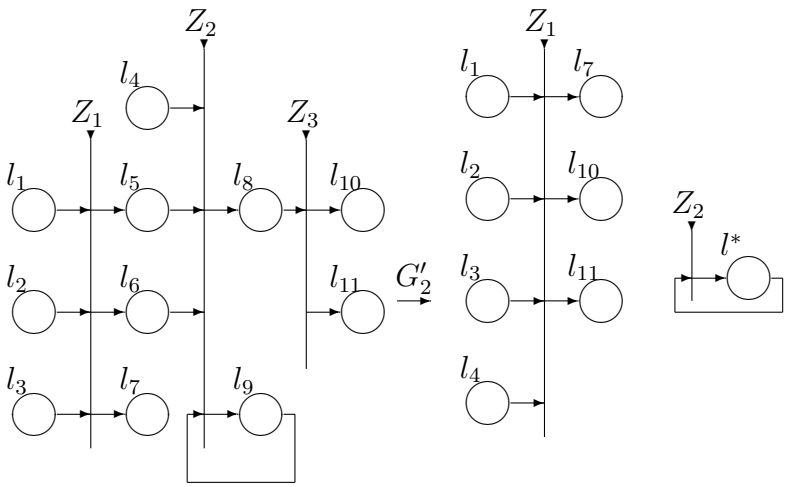

Figure 1: Sample generalized net and the result of applying G'_2 over it

- $Z_1 = \langle Q^I, Q^O, T, t^*, r_1^*, *, * \rangle$;
- $Z_2 = \langle \{l^*\}, \{l^*\}, T, t^*, *, *, * \rangle$;
- $Q^I = \{l'_1, l'_2, ..., l'_n\}$ and $Q^O = \{l''_1, l''_2, ..., l''_m\}$ are the input and output places of E, respectively;
- $l^* \notin Q^I \cup Q^O$;
- $\pi_A^* = \{\langle Z_1, 0\rangle, \langle Z_2, 1\rangle\}$ is a function that specifies transitions' priorities - $\pi_A^*(Z_2) = 1$, e.g. greater than Z_1's priority;
- r_1^* is the following predicate matrix:

$$r_1^* = \begin{array}{c|ccc} & l''_1 & \dots & l''_m \\ \hline l'_1 & W_{1,1} & \dots & W_{1,m} \\ \vdots & \vdots & & \vdots \\ l'_n & W_{n,1} & \dots & W_{n,m} \end{array}$$

  where predicate $W_{i,j}$ checks whether the place named l''_j, part of the net E (represented as a characteristic of γ), contains a token that corresponds to a token in l'_i from E'.
- $\pi_L^* = \pi_L \cup \{\langle l^*, \max \pi_L + 1\rangle\}$ sets the priority of the new place l^* to be the highest possible in the net. All other places retain their priorities;
- $c^* = c \cup \{\langle l^*, \infty\rangle\}$;
- $\gamma \notin K$;
- $\pi_K^* = \pi_K \cup \{\langle \gamma, \max \pi_K + 1\rangle\}$;
- $\theta_K^* = \theta_K \cup \{\langle \gamma, T\rangle\}$ sets the entering times of all tokens. The new token γ enters the net at the beginning of its functioning, while all other tokens retain their previous entering times;

- $X^* = X \cup \{\langle \gamma, E \rangle\}$ sets the initial characteristics of the tokens. γ's characteristic is an ordered 4-tuple representing the original GN E;
- $\Phi^*_{l''_j}, 1 \leq j \leq m$, updates the characteristics of tokens in l''_j by copying the characteristics of the corresponding tokens in E;
- $\Phi^*_{l^*}$ applies one step from algortihm B for token movement [8] on the generalized net E, represented by the characteristic of γ;
- $b^* = b \cup \{\langle \gamma, \infty \rangle\}$.

3 Conclusion

The so-defined global operator simplifies a given generalized net E while not altering its functioning and the results of its work. G'_2, as well as the other GN operators, can be used for model refactoring.

G'_2 can easily be extended to support various extensions of GNs.

The proposed global operator G'_2 is important for checking properties (correctness, equivalence, etc.) of procedural [10] and object-oriented programs [9].

Future work on the topic will include:

- Extending G'_2 to support token splitting and merging.
- Support for predicates and characteristic functions written in GNTCFL in GN IDE.
- Formalization and extensions of other GN operators.

Acknowledgements

This work is supported by the National Science Fund Grant DID 02-29/2009 "Modelling of Processes with Fixed Development Rules (ModProFix)".

References

[1] Atanassov, K. *Generalized Nets,* World Scientific, Singapore, 1991.

[2] Atanassov, K. *On Generalized Nets Theory,* "Prof. M. Drinov" Academic Publishing House, Sofia, 2007.

[3] Atanassov, K. Operator aspect of the theory of generalized nets. *AMSE Review,* Vol. 4, 1987, No. 4, 27–30.

[4] Atanassov, K. Global operators defined on the set of generalized nets. *AMSE Review,* Vol. 4, 1987, No. 4, 31–46.

[5] Atanassov, K., E. Sotirova. On Global Operator G_{21} Defined over Generalized Nets. *Cybernetics and Information Technologies,* Vol. 4, 2004, No 2, 30–40.

[6] Dimitrov, D. G. A Graphical Environment for Modeling and Simulation with Generalized Nets. *Annual of "Informatics" Section, Union of Scientists in Bulgaria,* Vol. 3, 2010, 51–66 (In Bulgarian).

[7] Dimitrov, D. G. GN IDE - A Software Tool for Simulation with Generalized Nets, *Proc. of Tenth Int. Workshop on Generalized Nets,* Sofia, 5 December 2009, 70–75.

[8] Dimitrov, D. Optimized algorithm for token transfer in generalized nets. *Recent Advances in Fuzzy Sets, Intuitionistic Fuzzy Sets, Generalized Nets and Related Topics, Vol. 1: Foundations,* 2010, 63–68.

[9] Todorova, M. Construction of Correct Object-Orientated Programs via Building their Generalized Nets Models, *Annual of "Informatics" Section Union of Scientists in Bulgaria,* Vol. 4, 2011, 1–28 (In Bulgarian).

[10] Todorova, M. Verification of Procedural Programs via Building their Generalized Nets Models. *Proceedings of the 41. Spring Conference of the Union of Bulgarian Mathematicians, Mathematics and Education in Mathematics,* 2012, 259–265.

[11] Trifonov, T., K. Georgiev, K. Atanassov. Software for modelling with Generalised Nets, *Issues in Intuitionistic Fuzzy Sets and Generalized Nets,* Vol. 6, 2008, 36–42.