18th Int. Conf. on IFSs, Sofia, 10–11 May 2014
Notes on Intuitionistic Fuzzy Sets
ISSN 1310–42926
Vol. 20, 2014, No. 2, 109–118

Intuitionistic fuzzy evaluation of tokens in generalized nets based on their characteristics

Velin Andonov

Institute of Biophysics and Biomedical Engineering
Bulgarian Academy of Sciences
105 Acad. G. Bonchev Str., Sofia 1113, Bulgaria
e-mail: velin_andonov@yahoo.com

Abstract: A way to evaluate the tokens in Generalized Nets (GNs) is proposed. It is based on determining whether the characteristics of the tokens meet a predefined criterion. The evaluation is obtained in the form of intuitionistic fuzzy pairs. It is shown how a given GN can be extended so that evaluations of tokens can be obtained during the functioning of the net. The method proposed here can be applied to any GN model.
Keywords: Evaluation of tokens, Generalized nets, Intuitionistic fuzzy pairs.
AMS Classification: 68Q85, 03E72.

1 Introduction

Generalized Nets (GNs) (see [2, 3]) are extentions of Petri Nets (see [7]). The definition of GN and the algorithm for its functioning can be found in [3]. Here we will only mention the basic notation.

Transition is the seven-tuple

$$Z = \langle L', L'', t_1, t_2, r, M, \Box \rangle \ . \tag{1}$$

Generalized net is the ordered four-tuple

$$E = \langle \langle A, \pi_A, \pi_L, c, f, \theta_1, \theta_2 \rangle, \langle K, \pi_K, \theta_K \rangle, \langle T, t^0, t^* \rangle, \langle X, \Phi, b \rangle \rangle \ . \tag{2}$$

In GNs the important data about the modelled process is stored in the form of characteristics of the tokens. These characteristics are assigned through the characteristic function Φ to the tokens

when they make the transfer from input to output place of a transition. For arbitrary token α by $\overline{x}^{\alpha} = \langle x_0^{\alpha}, x_1^{\alpha}, ..., x_{fin}^{\alpha} \rangle$ we denote the vector of all characteristics obtained by the token during its transfer in the net. In general, these characteristics can be from different types, i.e. some of them can be numerical while others can be symbols, words or whole sentences. For simplicity, to illustrate the idea of evaluating the tokens on the basis of their characteristics we shall first consider that the characteristics are all real numbers. Some of these characteristics might be considered "good" or "bad" according to some criteria. For example, if the characteristics of our token α represent the monthly income of a person and T is the poverty threshold then every characteristic $x_i^{\alpha} < T$ for $0 \leq i \leq fin$ can be considered bad. While each characteristic $x_i^{\alpha} \geq T$ can be considered good. Now using the indicator function

$$I^{\alpha}(x_i^{\alpha}) = \begin{cases} 0, & \text{if}\, x_i^{\alpha} < T \\ 1, & \text{if}\, x_i^{\alpha} \geq T \end{cases} \tag{3}$$

we can evaluate the token with respect to the criterion with the function

$$\mu_{\alpha} = \frac{\sum\limits_{i=0}^{fin} I^{\alpha}(x_i^{\alpha})}{fin} \,. \tag{4}$$

In this simple example μ_{α} is a fuzzy membership function (see [8]) because we assumed that all characteristics of the tokens are real numbers. In the more general case for the characteristics of a token α we may have two sets Δ^{α} and Ξ^{α} which are respectively the set of all possible good characteristics (i.e. they meet some criterion) and all possible bad characteristics (i.e. they do not meet the criterion). However, some of the characteristics of the tokens may not belong to either of these two sets. For such characteristics we cannot determine whether they are "bad" or "good" and their number counts for the indeterminacy of the evaluation. Of course we shall require that $\Xi^{\alpha} \cap \Delta^{\alpha} = \emptyset$. To illustrate this, let in our example with the monthly income T_1 be the poverty threshold and T_2 the richness threshold. If we want to determine whether the person represented by the token is rich or poor, then $\Xi^{\alpha} = \{x \,|\, x \in R^{+} \,\&\, x < T_1\}$ and $\Delta^{\alpha} = \{x \,|\, x \in R^{+} \,\&\, x > T_2\}$. To evaluate the token in this case we use the indicator functions

$$I_{\Delta}^{\alpha}(x_i^{\alpha}) = \begin{cases} 0, & \text{if} \;\; x_i^{\alpha} \notin \Delta^{\alpha} \\ 1, & \text{if} \;\; x_i^{\alpha} \in \Delta^{\alpha} \end{cases} \,, \tag{5}$$

$$I_{\Xi}^{\alpha}(x_i^{\alpha}) = \begin{cases} 0, & \text{if}\, x_i^{\alpha} \notin \Xi^{\alpha} \\ 1, & \text{if}\, x_i^{\alpha} \in \Xi^{\alpha} \end{cases} \,. \tag{6}$$

The ordered couple $\langle \mu_{\alpha}, \nu_{\alpha} \rangle$ where

$$\mu_{\alpha} = \frac{\sum\limits_{i=0}^{fin} I_{\Delta}^{\alpha}(x_i^{\alpha})}{fin} \,, \tag{7}$$

$$\nu_{\alpha} = \frac{\sum\limits_{i=0}^{fin} I_{\Xi}^{\alpha}(x_i^{\alpha})}{fin} \tag{8}$$

is an evaluation of the token α with respect to the criterion. Obviously, $\mu_\alpha, \nu_\alpha \in [0,1]$ and $\mu_\alpha + \nu_\alpha \leq 1$. In this case $\langle \mu_\alpha, \nu_\alpha \rangle$ is an intuitionistic fuzzy pair (see [5]). The number $\pi_\alpha = 1 - \mu_\alpha - \nu_\alpha$ is the degree of indeterminacy in intuitionistic fuzzy sense.

The indeterminacy can occur due to two reasons. In our example above some of the characteristics of the tokens may belong to the set $U^\alpha = \{x \,|\, x \in R^+ \,\&\, T_1 \leq x \leq T_2\}$. Their number contributes to the degree of indeterminacy due to the criterion. As we already mentioned, in some GNs tokens can receive characteristics of different types and when the criterion of evaluation is related to only one particular type of tokens' characteristics all other characteristics from different types do not belong to any of the two sets Δ^α and Ξ^α. Their number contributes to the indeterminacy due to the GN model.

The tokens in GNs obtain characteristics during their transfer in the net. In the example above we assumed that the token which is object of evaluation preserves all of its characteristics during its stay in the net. However, in the general case not all of the characteristics are preserved by the tokens. The maximum number of characteristics that a token α can keep during its stay in the net is determined by the function b. If the evaluation of the token is performed when the token has already finished its transfer in the net, only the last $b(\alpha)$ characteristics will be taken into account. That is why it is important to obtain evaluations of tokens not only after the token has finished its transfer in the net but also after each transfer from input to output place, i.e. during the functioning of the net. In this way all characteristics of the token are taken into account. Also, when the GN is used to control the process the intermediate evaluations can be important for the future decisions.

Let $\overline{x}^\alpha_{cu} = \langle x^\alpha_i, x^\alpha_{i+1}, ..., x^\alpha_{i+b(\alpha)-1} \rangle$ be the current vector with characteristics of token α. Since all previous characteristics obtained by the token before x^α_i are lost, formulae (7) and (8) become

$$\mu^{cu}_\alpha = \frac{\sum\limits_{k=0}^{b(\alpha)-1} I^\alpha_\Delta(x^\alpha_{i+k})}{b(\alpha)}, \tag{9}$$

$$\nu^{cu}_\alpha = \frac{\sum\limits_{k=0}^{b(\alpha)-1} I^\alpha_\Xi(x^\alpha_{i+k})}{b(\alpha)}. \tag{10}$$

After the next transfer of α from input to output place the vector with characteristics becomes $\overline{x}^\alpha_{cu+1} = \langle x^\alpha_{i+1}, x^\alpha_{i+2}, ..., x^\alpha_{i+b(\alpha)-1}, x^\alpha_{i+b(\alpha)} \rangle$. The evaluation of the token on the basis of these characteristics is

$$\mu^{cu+1}_\alpha = \frac{\sum\limits_{k=1}^{b(\alpha)} I^\alpha_\Delta(x^\alpha_{i+k})}{b(\alpha)}, \tag{11}$$

$$\nu^{cu+1}_\alpha = \frac{\sum\limits_{k=1}^{b(\alpha)} I^\alpha_\Xi(x^\alpha_{i+k})}{b(\alpha)}, \tag{12}$$

i.e. the oldest obtained characteristic in $\overline{x}^\alpha_{cu}$ is substituted by the newly obtained $x^\alpha_{i+b(\alpha)}$. It is evident that all intermediate evaluations do not take into account the lost characteristics and they only give us information about the recent history of the token. However, we may need (which

is more reasonable) to evaluate the whole life of the token in the net. In such case the question arises whether it is possible to evaluate the token on the basis of the vector $\langle x_i^\alpha, x_{i+1}^\alpha, ..., x_{i+b(\alpha)-1}^\alpha, x_{i+b(\alpha)}^\alpha \rangle$ in which the oldest characteristic x_i^α is lost. If this is not possible, then it will not be possible to evaluate the token at the end of its transfer in the net on the basis of all obtained characteristics. Let $\langle \overline{\mu}_\alpha^{cu}, \overline{\nu}_\alpha^{cu} \rangle$ be the evaluation of the vector of the last $b(\alpha)+1$ characteristics where

$$\overline{\mu}_\alpha^{cu} = \frac{\sum_{k=0}^{b(\alpha)} I_\Delta^\alpha(x_{i+k}^\alpha)}{b(\alpha)+1} , \tag{13}$$

$$\overline{\nu}_\alpha^{cu} = \frac{\sum_{k=0}^{b(\alpha)} I_\Xi^\alpha(x_{i+k}^\alpha)}{b(\alpha)+1} . \tag{14}$$

Obviously, we cannot obtain directly the pair $\langle \overline{\mu}_\alpha^{cu}, \overline{\nu}_\alpha^{cu} \rangle$ from the pairs $\langle \mu_\alpha^{cu+1}, \nu_\alpha^{cu+1} \rangle$ and $\langle \mu_\alpha^{cu}, \nu_\alpha^{cu} \rangle$. First we have to obtain the two unknown addends $I_\Delta^\alpha(x_i^\alpha)$ and $I_\Xi^\alpha(x_i^\alpha)$ in the numerators of (13) and (14) respectively. This can be done using (9) and (10):

$$I_\Delta^\alpha(x_i^\alpha) = \mu_\alpha^{cu} b(\alpha) - \sum_{k=1}^{b(\alpha)-1} I_\Delta^\alpha(x_{i+k}^\alpha) , \tag{15}$$

$$I_\Xi^\alpha(x_i^\alpha) = \nu_\alpha^{cu} b(\alpha) - \sum_{k=1}^{b(\alpha)-1} I_\Xi^\alpha(x_{i+k}^\alpha) . \tag{16}$$

Substituting (15) and (16) in (13) and (14) respectively we get the pair $\langle \overline{\mu}_\alpha^{cu}, \overline{\nu}_\alpha^{cu} \rangle$. To evaluate the token on the basis of the vector $\langle x_{i-1}^\alpha, x_i^\alpha, x_{i+1}^\alpha, ..., x_{i+b(\alpha)-1}^\alpha, x_{i+b(\alpha)}^\alpha \rangle$, i.e. taking into account the two most recently deleted characteristics x_{i-1}^α and x_i^α, first we have to determine whether x_i^α belongs to Δ^α or Ξ^α in the way described above and then do the same with x_{i-1}^α using the corresponding intuitionistic fuzzy pair. By induction it follows that we can obtain evaluation of the token on the basis of all characteristics obtained during its stay in the net. However, this is not practical because each time we have to calculate all unknown values of the indicator functions I_Δ^α and I_Ξ^α, i.e. those values that correspond to the already deleted characteristics.

Instead of obtaining evaluation of the token based on all characteristics through the intermediate evaluations, it is more practical to store all characteristics of the tokens that are evaluated. In this way all characteristics of the tokens obtained from the moment when they enter the net until the current time moment can be included directly in the intermediate evaluations. In the next section we propose a modification of a given GN model that allows us to preserve all characteristics of the tokens and include them in the evaluations.

2 Extended GN model aimed at evaluating the tokens on the basis of their characteristics during the functioning of the net

Let E be a given GN (see Fig. 1).

$$E = \langle\langle A, \pi_A, \pi_L, c, f, \theta_1, \theta_2\rangle, \langle K, \pi_K, \theta_K\rangle, \langle T, t^0, t^*\rangle, \langle X, \Phi, b\rangle\rangle\,.$$

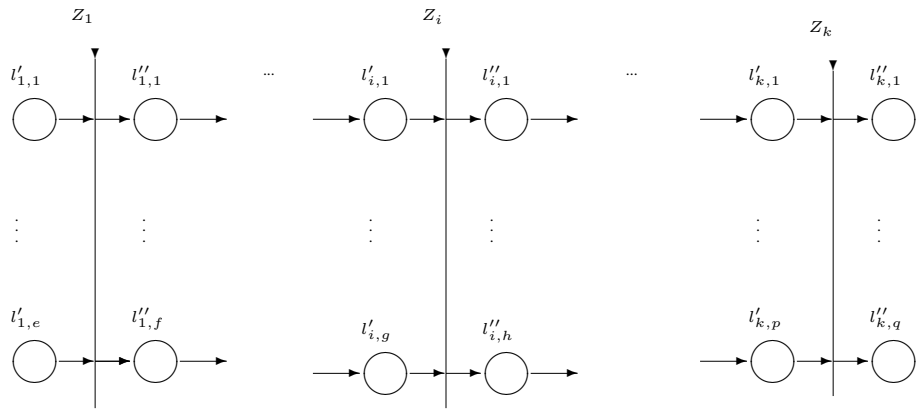

Figure 1

We shall propose a modification of E that would allow us to preserve all characteristics of the tokens which are to be evaluated. In the extended GN model the evaluations of the tokens are obtained during the functioning of the net. We assume that the GN E has k transitions. To every transition $Z_i = \langle L'_i, L''_i, t^i_1, t^i_2, r_i, M_i, \Box_i\rangle$ for $i = 1, 2, ..., k$ we add two more places l^*_i and l^{**}_i the first of which is output for the transition while the second is both input and output. The so constructed new transition we denote by $Z^*_i = \langle L'^*_i, L''^*_i, t^1_i, t^2_i, r^*_i, M^*_i, \Box^*_i\rangle$, where

$$L'^*_i = L'_i \cup \{l^{**}_i\}\,,$$

$$L''^*_i = L''_i \cup \{l^*_i, l^{**}_i\}\,.$$

If $r_i = [L'_i, L''_i, \{r_{l_s,l_t}\}]$ is the index matrix of transition's conditions, then

$$r^*_i = [L'^*_i, L''^*_i, \{r^*_{l_s,l_t}\}]\,,$$

where

$$(\forall l_s \in L'_i)(\forall l_t \in L''_i)(r^*_{l_s,l_t} = r_{l_s,l_t})\,;$$

$$(\forall l_s \in L'_i)(r^*_{l_s,l^*_i} = r^*_{l_s,l^{**}_i} = \text{“}false\text{”})\,;$$

$$(\forall l_t \in L''_i)(r^*_{l^{**}_i,l_t} = \text{“}false\text{”})\,;$$

$r^*_{l^{**}_i,l^{**}_i}$ =*“at least one token which is object of evaluation has been tranferred from input to output place of the transition”* ;

$$r^*_{l^{**}_i,l^*_i} = r^*_{l^{**}_i,l^{**}_i}\,.$$

If $M_i = [L'_i, L''_i, \{m_{l_s,l_t}\}]$ is the index matrix with the capacities of the arcs, then

$$M^*_i = [L'^*_i, L''^*_i, \{m^*_{l_s,l_t}\}]\,,$$

where

$$(\forall l_s \in L'_i)(\forall l_t \in L''_i)(m^*_{l_s,l_t} = m_{l_s,l_t})\,;$$
$$(\forall l_s \in L'_i)(m^*_{l_s,l^*_i} = m^*_{l_s,l^{**}_i} = 0)\,;$$
$$(\forall l_t \in L''_i)(m^*_{l^{**}_i,l_t} = 0)\,;$$
$$m^*_{l^{**}_i,l^{**}_i} = m^*_{l^{**}_i,l^*_i} = 1\,.$$
$$\square^*_i = \square_i\,.$$

Let A' be the set of all transitions obtained from the transitions of E through the procedure described above.

We construct a new transition $Z_{ev} = \langle L'_{ev}, L''_{ev}, t^{ev}_1, t^{ev}_2, r_{ev}, M_{ev}, \square_{ev}\rangle$, where

$$L'_{ev} = \{l^*_1, l^*_2, ..., l^*_k\} \cup \{l_{ev}, l_{cr}\}\,,$$

$$L''_{ev} = \{l_{ev}, l_{cr}\}\,,$$

$r_{ev} =$

	l_{ev}	l_{cr}
l^*_1	$true$	$false$
l^*_2	$true$	$false$
$\vdots$	$\vdots$	$\vdots$
l^*_k	$true$	$false$
l_{ev}	$true$	$false$
l_{cr}	$false$	$true$

,

$M_{ev} =$

	l_{ev}	l_{cr}
l^*_1	1	0
l^*_2	1	0
$\vdots$	$\vdots$	$\vdots$
l^*_k	1	0
l_{ev}	1	0
l_{cr}	0	1

,

$$\square_{ev} = \wedge(\vee(l^*_1, l^*_2, ..., l^*_k), l_{cr})\,.$$

We denote the modified GN by E^* (see Fig. 2).

$$E^* = \langle\langle A^*, \pi^*_A, \pi^*_L, c^*, f^*, \theta^*_1, \theta^*_2\rangle, \langle K^*, \pi^*_K, \theta^*_K, \rangle, \langle T, t^0, t^{**}\rangle, \langle X, \Phi, b\rangle\rangle\,,$$

where

$$A^* = A' \cup \{Z_{ev}\}\,;$$

$$\pi^*_A = \pi_A \cup \pi_{Z_{ev}}\,,$$

where the function $\pi_{Z_{ev}}$ determines the priority of the transition Z_{ev} and it is the lowest among all other transitions of the net.

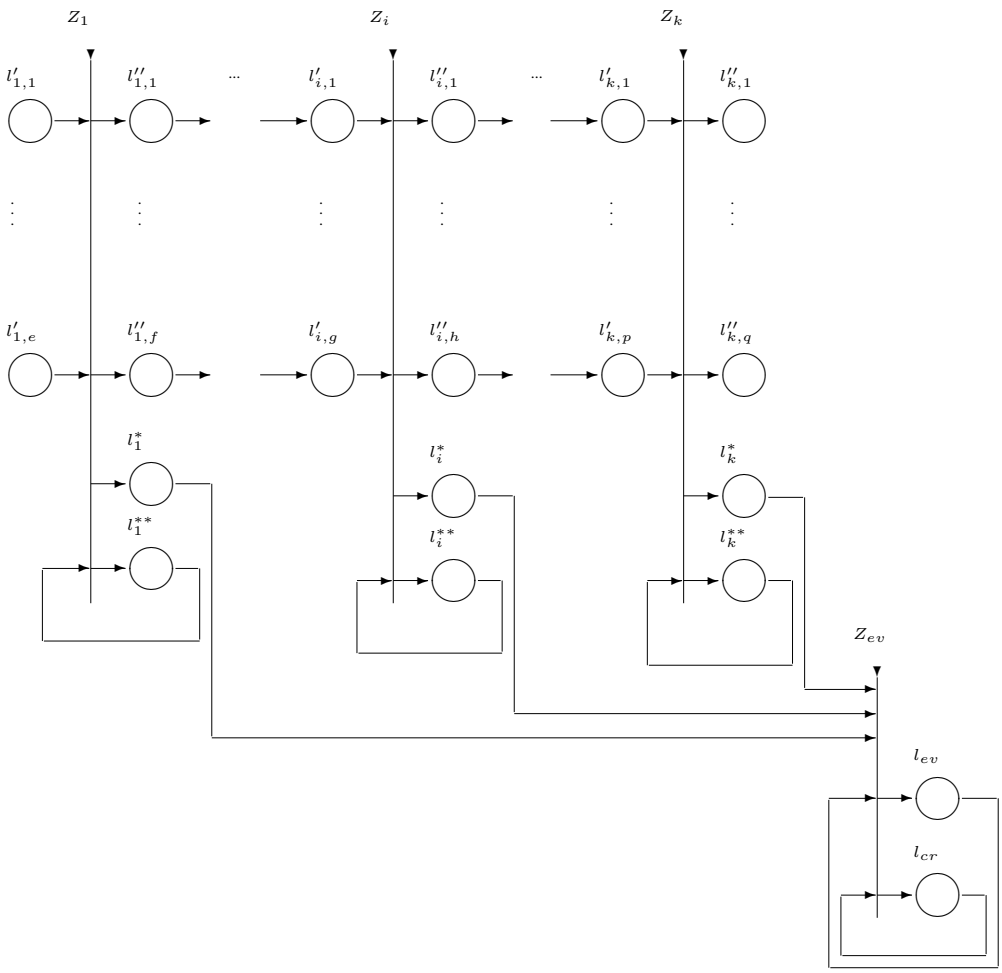

Figure 2. Graphical representation of the extended GN model.

$$\pi^*_L = \pi_L \cup \pi_{\{l^*_n|Z_n\in A\}} \cup \pi_{\{l^{**}_n|Z_n\in A\}} \cup \pi_{l_{ev}} \cup \pi_{l_{cr}} \ ,$$

where $\pi_{\{l^*_n|Z_n\in A\}}$ determines the priorities of the l^*_i places and they should be minimal among the priorities of the output places, i.e. $\pi_{\{l^*_n|Z_n\in A\}}(l^*_i) < \min\limits_{l''_{i,j}\in pr_2 Z_i} \pi_L(l''_{i,j})$. The function $\pi_{\{l^{**}_n|Z_n\in A\}}$ determines the priorities of the places l^{**}_i for $i = 1, 2, ..., k$ and they should be the lowest among the priorities of the input places of the transition: $\pi_{\{l^{**}_n|Z_n\in A\}}(l^{**}_i) = \min\limits_{l'_{i,j}\in pr_1 Z_i} \pi_L(l'_{i,j})$. The functions $\pi_{l_{ev}}$ and $\pi_{l_{cr}}$ which determine the priorities of the places of the additional transition Z^* should satisfy the condition $\pi_{l_{ev}} < \min\limits_{1\le i\le k} \pi_{\{l^*_n|Z_n\in A\}}(l^*_i)$.

$$c^* = c \cup c_{\{l^*_n|Z_n\in A\}} \cup c_{\{l^{**}_n|Z_n\in A\}} \cup c_{l_{cr}} \cup c_{l_{ev}} \ ,$$

where

$$(\forall i \in \{1, 2, ..., k\})(c_{\{l^*_n|Z_n\in A\}}(l^*_i) = c_{\{l^{**}_n|Z_n\in A\}}(l^{**}_i) = 1)$$

and $c_{l_{cr}} = c_{l_{ev}} = 1$. The function f^* coincides with f over the predicates of the original GN and its definition over the new predicates $r^*_{l^{**}_i, l^{**}_i}$ depends on the concrete model. The time-moment

when E^* starts functioning and the elementary time-step are the same as in E. The duration of functioning of E^* is exactly one step longer than that of E:

$$t^{**} = t^* + 1\,.$$

This is required because the evaluation of the tokens in Z_{ev} is done exactly one time-step after the transfer of the token.

In the initial time moment, token α_i^* stays in place l_i^{**} for every $i \in \{1, 2, ..., k\}$ without initial characteristic. Token β stays in place l_{cr} with initial characteristic a list of the tokens that are to be evaluated and the corresponding criterion in the form *"token, criterion of evaluation"*. Token α^* stays in place l_{ev} without initial characteristic.

$$K^* = K \cup K_{\alpha*} \cup \{\alpha^*, \beta\}\,,$$

where $K_{\alpha^*} = \bigcup_{i=1}^{k} \alpha_i^*$ is the set of all additional tokens in the places l_i^{**}.

$$\pi_K^* = \pi_K \cup \pi_{\{\alpha_n^*|\alpha_n^* \in K_{\alpha^*}\}} \cup \pi_{\alpha^*} \cup \pi_\beta\,,$$

where the function $\pi_{\{\alpha_n^*|\alpha_n^* \in K_{\alpha^*}\}}$ determines the priorities of the the α_i^* tokens for $1 \leq i \leq k$. These priorities have no effect on the functioning of the GN E^*. One way to assign priorities to the α_i^* tokens is by using the priorities of the transitions, i.e. $\pi_{\{\alpha_n^*|\alpha_n^* \in K_{\alpha^*}\}}(\alpha_i^*) = \pi_A(Z_i)$, for $i = 1, 2, ...k$. The priorities of the tokens α^* and β also do not have effect on the functioning of the net. When the truth value of the predicate $r_{l_i^{**}}^*, l_i^{**}$ is true the α_i^* token splits into two tokens — the original that remains in l_i^{**} and a new one $\alpha_i^{*'}$ which enters place l_i^*. The characteristic function Φ^* which assigns characteristics to the tokens when they enter the output places coincides with Φ over all places with exception of the places l_i^{**}, l_i^*, l_{ev} and l_{cr}.

$$\Phi^* = \Phi \cup \Phi_{\{l_n^*|Z_n \in A\}} \cup \Phi_{\{l_n^{**}|Z_n \in A\}} \cup \Phi_{l_{ev}} \cup \Phi_{l_{cr}}\,,$$

where

$$\Phi_{\{l_n^{**}|Z_n \in A\}}(\alpha_i^*) = \text{“}\emptyset\text{”}\,,$$

$$\Phi_{\{l_n^*|Z_n \in A\}}(\alpha_i^{*'}) = \text{“}\langle\langle\alpha_p, \Phi_{l''_{i,1}}(\alpha_p)\rangle, \langle\Phi_{l''_{i,2}}(\alpha_q)\rangle, ..., \langle\Phi_{l''_{i,s}}(\alpha_t)\rangle\rangle\text{”}\,.$$

Here by $\langle\alpha_p, \Phi_{l''_{i,1}}(\alpha_p)\rangle$,$\langle\alpha_q, \Phi_{l''_{i,2}}(\alpha_q)\rangle$,...,$\langle\alpha_t, \Phi_{l''_{i,s}}(\alpha_t)\rangle$ we denote the tokens that have been transferred to the output places of the transition and the characteristics assigned to them in the places. The tokens from places l_i^* enter place l_{ev} where they merge into a token α^* with characteristic a list of the different types of tokens in the net together with their evaluation according to the criterion kept as characteristic of token β which loops in l_{cr}:

$$\Phi_{l_{ev}}(\alpha^*) = \text{“}\langle\alpha_1, \overline{x}_{0,cu}^{\alpha_1}, \langle\mu_{\alpha_1}, \nu_{\alpha_1}\rangle\rangle, \langle\alpha_2, \overline{x}_{0,cu}^{\alpha_2}, \langle\mu_{\alpha_2}, \nu_{\alpha_2}\rangle\rangle, ..., \langle\alpha_j, \overline{x}_{0,cu}^{\alpha_j}, \langle\mu_{\alpha_j}, \nu_{\alpha_j}\rangle\rangle\text{”}\,,$$

where $\langle\mu_{\alpha_i}, \nu_{\alpha_i}\rangle$ is the IFP for the token α_i for $i = 1, 2, ..., j$ and j is the number of the tokens which are object of evaluation. By $\overline{x}_{0,cu}^{\alpha_i}$ for $i = 1, 2, ..., j$ we denote the vector of all characteristics obtained by token α_i up to the current time moment.

Similar extension of a GN model for aggregation of statistical data derived from the simulation is described in [6].

3 Conclusion and future work

The proposed method for evaluation of tokens in GNs is based on counting the number of characteristics that meet a predefined criterion and those that do not meet it. We have pointed out two sources of indeterminacy of the evaluations — due to the criterion and due to the GN model. The extension of a given GN model proposed here can be applied to every GN. Moreover, just by changing the characteristic function Φ for place l_{ev} we can either evaluate each token separately or obtain one evaluation for all tokens of the same type. The possibility to obtain evaluations of the tokens after each transfer can be useful if the GN model is used to control the modeled process. The intermediate evaluations of the tokens can show us if there is a problem with the functioning of the net. For example values of ν_α close to 1 may be a sign of such problem. The evaluation proposed in this paper cannot detect sudden change in the behavior of the net when after a series of "good" characteristics the token starts obtaining only "bad" characteristics. This is so because the order of obtaining the characteristics is not taken into account.

When the value of ν_α increases in a few consecutive intermediate evaluations and the token loops in one place the problem may not be related to the token but to the place. More generally, the "bad" characteristics which contribute to the value of ν_α may be assigned to the token in one particular place into which the token enters periodically. In such case, again, the problem can be related to that place. This comes to show that the characteristics of the tokens can also be used to obtain evaluations of the work of the places, transitions and even the whole net.

In this aspect, it is worth mentioning one of the most recent extensions of GNs — Generalized Nets with Characteristics of the Places (GNCP) (see [1]) — in which the places can also obtain characteristics when tokens enter them. Now it is clear that the tokens and the places can be evaluated on the basis of the characteristics of the places. In future we intend to study the possibilities of evaluating the places on the basis of the characteristics of the tokens, the tokens on the basis of the characteristics of the places, the places on the basis of the characteristics of the places. Parallel evaluation of tokens and places would help for easier detection of problems related to the functioning of the net.

References

[1] Andonov, V., K. Atanassov, Generalized nets with characteristics of the places. *Compt. rend. Acad. bulg. Sci.*, Vol. 66, 2013, No. 12, 1673–1680.

[2] Atanassov, K., *Generalized Nets*. World Scientific, Singapore, 1991.

[3] Atanassov, K., *On Generalized Nets Theory*. Prof. M. Drinov Academic Publ. House, Sofia, 2007.

[4] Atanassov, K., *On Intuitionistic Fuzzy Sets Theory*. Springer, Physica-Verlag, Berlin, 2012.

[5] Atanassov, K., E. Szmidt, J. Kacprzyk, On intuitionistic fuzzy pairs. *Notes on Intuitionistic Fuzzy Sets,* Vol. 19, 2013, No. 3, 1–13.

[6] Atanassova, V., On intuitionistic fuzzy approach to generalized net prognostics. *New Developments in Fuzzy Sets, Intuitionistic Fuzzy Sets, Generalized Nets and Related Topics. Volume II: Applications*, SRI PAS/IBS PAN, Warsaw, 2012, 1–12.

[7] Murata, T., Petri Nets: Properties, Analysis and Applications. *Proceedings of the IEEE*, Vol. 77, 1989, No. 4, 541–580.

[8] Zadeh, L. A., Fuzzy sets. *Information and Control*, Vol. 8, 1965, 338–353.